Technical data sheet

SLL 60 medium-duty vertical ladder, 6 m, FS

Item number: 6010624

Vertical ladder with a side height of 60 mm with riveted C profile rungs, open in upwards direction.
Fastening takes place directly on the wall or using the wall brackets, type WB 30/75. The slot dimension of the rung is 18 mm and the appropriate clamp clip is type 2056U.

St	Steel
FS	Strip galvanised

Master data

Item number	6010624
Type	SLL 640 CPS 4 FS
Description 1	Medium duty vertical ladder
Description 2	with CPS rung
Manufacturer	OBO
Dimension	60x400x6000
Colour	zinc
Material	Steel
Surface	Strip galvanised
Surface standard	DIN EN 10346
Smallest sales unit	6
Unit of quantity	Metre
Weight	326.933 kg
Weight unit	kg/100 m
CO2 Footprint (GWP) Cradle-to-Gate	7,8022 kg CO2e / 1 Meter

Technical data sheet

SLL 60 medium-duty vertical ladder, 6 m, FS

Item number: 6010624

Dimensions

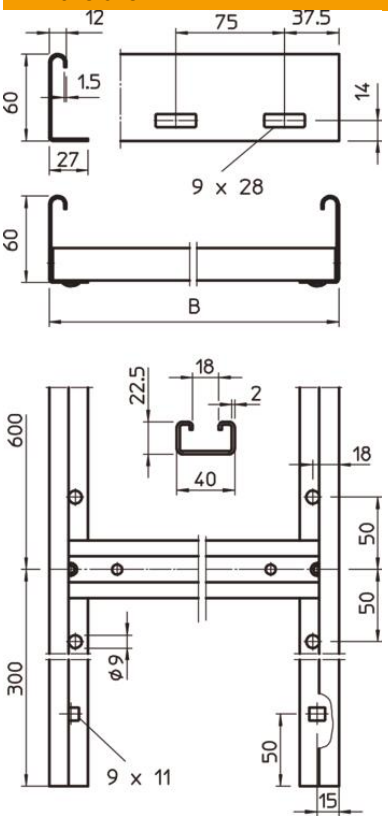

Length	6,000 mm
Width	400 mm
Height	60 mm
Dimension B	400 mm
Rung slot dimension	18.00

Technical data

Side wall version	Flat profile
Version of the rungs	Profile perforated
Maintain electrical functions	no
Usable cross-section	152 cm²
ROHS-conformant	yes
Rustproof steel, pickled	no
Side perforation	yes
Rung distance	600 mm
Rail thickness	1.5 mm