Technical data sheet

Mesh cable tray GR-Magic® 55 with 2 barrier strip

Item number: 6006468

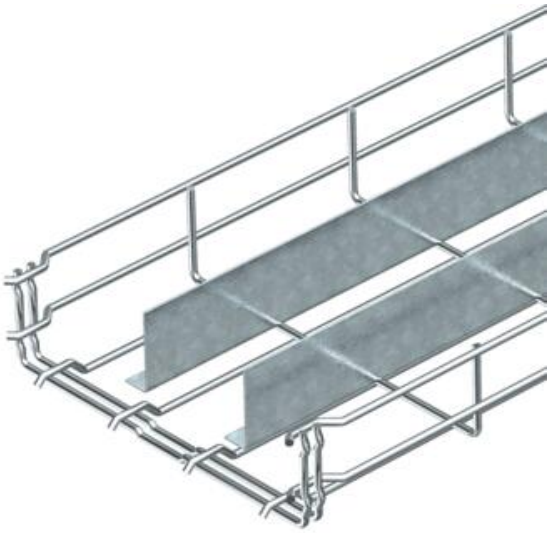

Mesh cable tray with shaped connector and two welded barrier strips of side height 55 mm.
No additional connection components are required for the mesh cable tray, it is simply interlocked. The grid width is 50 x 100 mm.
Magnetic shield insulation without cover 15 dB, with cover 25 dB.

St	Steel
G	Electrogalvanised

Master data

Item number	6006468
Type	GRM-2T 55 500 G
Description 1	Mesh cable tray GRM
Description 2	with 2 barrier strips
Manufacturer	OBO
Dimension	55x500x3000
Colour	zinc
Material	Steel
Surface	Electrogalvanised
Surface standard	EN ISO 19598 / EN ISO 4042
Smallest sales unit	3
Unit of quantity	Metre
Weight	370.633 kg
Weight unit	kg/100 m
CO2 Footprint (GWP) Cradle-to-Gate	6,7763 kg CO2e / 1 Meter

Technical data sheet

Mesh cable tray GR-Magic® 55 with 2 barrier strip

Item number: 6006468

Dimensions

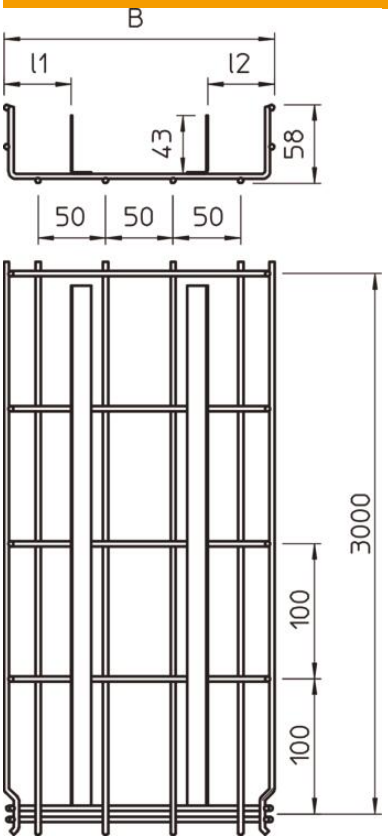

Length	3,000 mm
Width	500 mm
Width	19.69 in
Height	55 mm
Height	2.17 in
Dimension B	500 mm
Dimension l1	292.5 mm
Dimension L2 (mm)	150.5 mm

Technical data

Connector version	Integrated connector
Mounting system fastening type	Floor Ceiling Wall
Maintain electrical functions	no
Integrated partition	Two
Usable cross-section	220 cm²
Usable cross-section	22000 mm²
Profile shape	U-shaped
ROHS-conformant	yes
Rustproof steel, pickled	no
Screwless connector	yes
Wide-span version	no
Load test type according to IEC 61537	Type II
Type of connector, cable support system	Click fastening

Technical data sheet

Mesh cable tray GR-Magic® 55 with 2 barrier strip

Item number: 6006468

Loads

Insertable support spacings, min.	1 m
Insertable support spacings, max.	2 m
Support spacing 1.0 m	1.5 kN/m
Support spacing 1.5 m	0.8 kN/m
Support spacing 2.0 m	0.55 kN/m

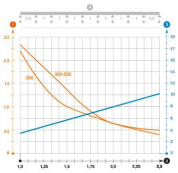

Load diagram, GR-Magic mesh cable tray, type GRM-2T 55

1. Permitted cable tray/ladder load in kN/m without man load
2. Support width in m
3. Rail bend in mm at permitted kN/m
4. Load scheme during testing

Load curve with cable tray/ladder width in mm

Strut bend curve according to support width