# Technical data sheet

## Insulated air-termination rod for inner-routed isCon conductor with side exit
## Item number: 5408940

- For installation of the OBO isCon® Pro+ conductor in the pipe
- With side conductor outlet matching isFang air-termination rod stand with side outlet, type isFang 3B-A
- Suitable for wind loads according to Eurocode 1: DIN EN 1991-1-4
- Inclusive connection element (type isCon IN connect)
- Inclusive potential connection (type isCon In PAE)
- Aluminium standpipe and air-termination tip
- Centre section made of fibre-glass reinforced plastic (GRP)

GFK Fibre-glass-reinforced plastic

### Master data

| | |
|---|---|
| Item number | 5408940 |
| Type | isFang IN-A 6000 |
| Description 1 | Insul. interception rod+outlet |
| Description 2 | for isCon conductor, internal |
| Manufacturer | OBO |
| Dimension | 6000mm |
| Material | Fibre-glass-reinforced plastic |
| Smallest sales unit | 1 |
| Unit of quantity | Piece |
| Weight | 939 kg |
| Weight unit | kg/100 pc. |
| CO2 Footprint (GWP) Cradle-to-Gate | 80,1331 kg CO2e / 1 Piece |

# Technical data sheet

## Insulated air-termination rod for inner-routed isCon conductor with side exit
## Item number: 5408940

### Dimensions

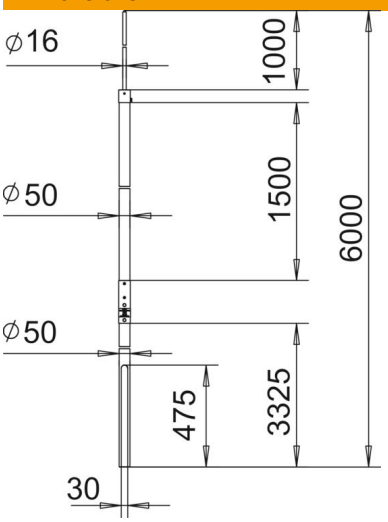


| | |
|---|---|
| Length | 6,000 mm |
| Dimension A | 3,325 mm |
| Dimension B | 1,000 mm |
| Dimension d min. | 50 mm |
| Dimension H | 1,500 mm |
| Dimension L | 6,000 mm |

### Technical data

| | |
|---|---|
| Connection | Round conductor |
| Version for | Air-termination rod |
| High voltage-resistant, insulated version | yes |