Technical data sheet

Wire cable clamp A4

Item number: 5302174

Wire cable clamp, formerly DIN 741, for fastening steel wire tensioning ropes. The bracket of the wire rope clamp must be positioned over the unloaded end of the wire rope loop; the clamping body rests against the load-bearing, continuous section of the wire rope loop. To ensure a secure connection, at least 3 wire cable clamps are required per wire rope loop, spaced at intervals of 1–2 times the clamp width. The hexagonal nuts must be tightened evenly in alternating order and retightened after the rope has been loaded for the first time.

CE

A4	Stainless steel
2B	Bright, treated

Master data

Item number	5302174
Type	947 5 A4
Description 1	Wire cable clamp
Manufacturer	OBO
Dimension	5mm
Material	Stainless steel 1.4401
Surface	Bright, treated
Surface standard	
Smallest sales unit	25
Unit of quantity	Piece
Weight	1.5 kg
Weight unit	kg/100 pc.
CO2 Footprint (GWP) Cradle-to-Gate	0,0733 kg CO2e / 1 Piece

Technical data sheet

Wire cable clamp A4

Item number: 5302174

Dimensions

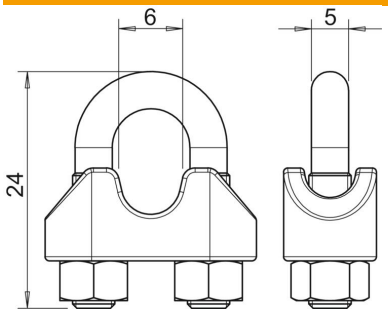

Dimension A	24 mm
Dimension B	6 mm
Dimension C	5 mm

Technical data

Version for	Not insulated
for cable diameter, min.	5 mm
ROHS-conformant	yes