Technical data sheet

Surge arrester, 1-pole with remote signalling 280 V

Item number: 5094727

Surge arrester, type 2

• Complete unit consisting of cover and base, pre-mounted and ready for connection
• Suitable for TN network systems
• Plug-in upper part; upper part can be separated from base without tools
• With remote signalling and potential-free NO contact for function monitoring
• Incl. thermal and dynamic cut-off unit
• With visual display of defects
• High current conductivity and long service life
• Labelled connections

Application example: Residential buildings, single-family homes and industrial
* Complete = cover and base

Mu | Type 2 | LPZ 1→2 | FS | 230/400 V System

Master data

Item number	5094727
Type	V20-C 1+FS-280
Description 1	SurgeController V20
Description 2	single pole, remote signalling
Manufacturer	OBO
Dimension	280V
Smallest sales unit	1
Unit of quantity	Piece
Weight	12.4 kg
Weight unit	kg/100 pc.
CO2 Footprint (GWP) Cradle-to-Gate	0,4484 kg CO2e / 1 Piece

Dimensions

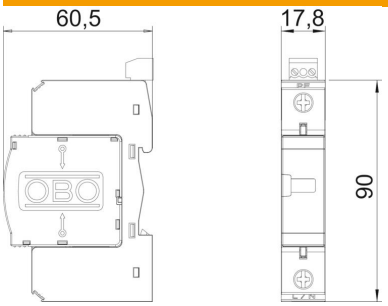

Technical data sheet

Surge arrester, 1-pole with remote signalling 280 V

Item number: 5094727

Technical data

[redacted]

Arrester surge current (8/20 µs) [total]	20 kA
Response time	<25 ns
Blow-out	no
Version for	1-pole + FS
Pole version	1
Structural width in division units (division unit, 17.5 mm)	1
Operating temperature, max.	80 °C
Operating temperature, min.	-40 °C
Remote signalling	yes
Maximum continuous voltage AC	280 V
Integrated back-up fuse	no
Conductor cross-section, rigid (single-wire/multiwire), max.	35 mm²
Conductor cross-section, rigid (single-wire/multiwire), min.	2.5 mm²
Lightning protection zone LPZ	1→2
Max. mains-side overcurrent protection	125
Maximum back-up fuse	125 A
Maximum discharge current (8/20 µs)	40 kA
Installation type	DIN rail 35 mm
Nominal discharge current (8/20 µs)	20 kA
Nominal discharge current (8/20 µs) [L-N]	20 kA
Nominal voltage AC (50/60 Hz)	230 V
Network form	TN
Test class, type 2	yes
ROHS-conformant	yes
Protection rating	IP20
Protection level	≤1,3 kV
Signalling on device	Visual
SPD to EN 61643-11	Type 2
SPD to IEC 61643-11	Class II
Permitted temperature range, max.	80 °C
Permitted temperature range, min.	-40 °C