Technical data sheet

Combination arrester V50, 1-pole + NPE 280 V

Item number: 5093594

Lightning current combination arrester, type 1+2 to DIN EN 61643-11

• For lightning protection equipotential bonding to VDE 0185-305 (IEC 62305)
• Complete unit, pre-mounted and ready for connection in polycarbonate housing (IP66)
• Lightning current arresting capacity 12.5 kA (10/350) per pole and up to 50 kA (10/350) in total

Application: Lightning protection equipotential bonding for buildings of Class III and IV.

If there is a danger of condensation forming through wind, ice, temperature or sunlight, further measures may be necessary!

* Complete = upper part and base

LPZ 0→2 | Type 1+2 | HALOGEN FREE

Master data

Item number	5093594
Type	VG-V50-1+NPE-280
Description 1	CombiController V50
Description 2	1+1 in housing
Manufacturer	OBO
Dimension	280V
Smallest sales unit	1
Unit of quantity	Piece
Weight	81 kg
Weight unit	kg/100 pc.
CO2 Footprint (GWP) Cradle-to-Gate	3,6301 kg CO2e / 1 Piece

Technical data sheet

Combination arrester V50, 1-pole + NPE 280 V

Item number: 5093594

Dimensions

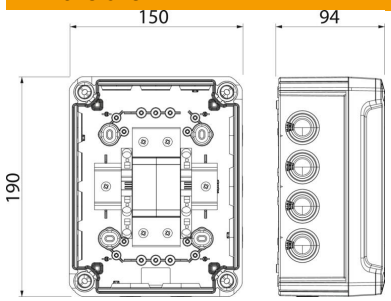

Technical data

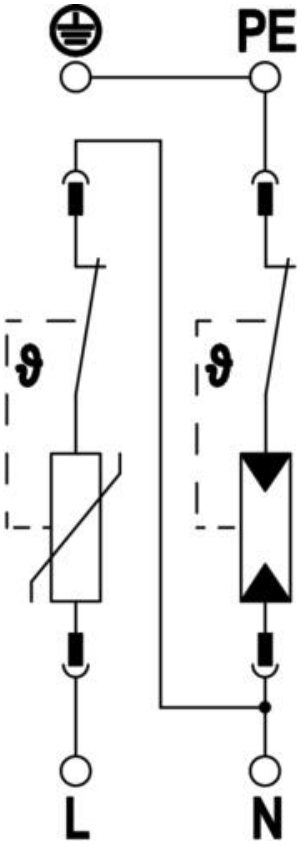

Arrester surge current (8/20 µs) [total]	50 kA
Connection cross-section (min.)	1.5 mm²
Connection cross-section, FM terminals, max.	16 AWG
Connection cross-section, FM terminals, max.	1.5 mm²
Connection cross-section, FM terminals, min.	21 AWG
Connection cross-section, FM terminals, min.	0.5 mm²
Response time	<25 ns
Response time [L-N]	25 ns
Blow-out	no
Pole version	1+N/PE
Structural width in division units (division unit, 17.5 mm)	Miscellaneous
Operating temperature, max.	80 °C
Operating temperature, min.	-40 °C
Lightning surge current (10/350 µs)	12.5 kA
Lightning surge current (10/350 µs) [L-N/PE]	50 kA
Lightning surge current (10/350 µs) [N/PE]	50 kA
Lightning surge current (10/350)	25 kA
Torque	35 Lbs
Torque	4 Nm
Torque for FM terminal	1.7 Lbs
Torque for FM terminal	0.2 Nm
Remote signalling	no
Follow current quenching capacity (eff) [N-PE]	0.1 kA
Function/defect display	Visual
Maximum continuous voltage (L-N)	280 V
Maximum continuous voltage (N-PE)	255 V
Maximum continuous voltage AC	280 V
Maximum continuous voltage DC	350 V
Integrated back-up fuse	no

Technical data sheet

Combination arrester V50, 1-pole + NPE 280 V

Item number: 5093594

Technical data

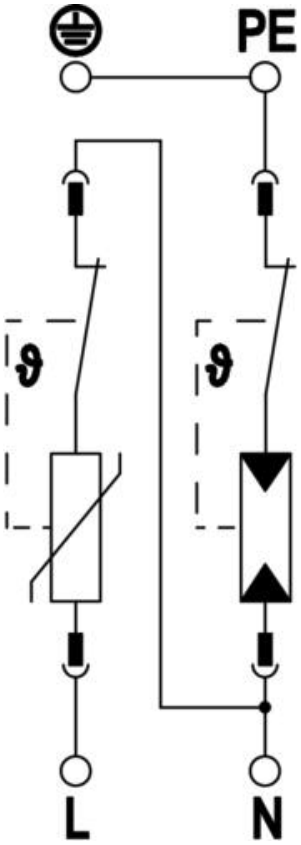

Short-circuit resistance for max. mains-side overcurrent protection	50 kA eff
Conductor cross-section, flexible (fine-wire), max.	35 mm²
Conductor cross-section, flexible (fine-wire), max.	2 AWG
Conductor cross-section, flexible (fine-wire), min.	16 AWG
Conductor cross-section, flexible (fine-wire), min.	1.5 mm²
Conductor cross-section, rigid (single-wire/multiwire), max.	2 AWG
Conductor cross-section, rigid (single-wire/multiwire), max.	35 mm²
Conductor cross-section, rigid (single-wire/multiwire), min.	16 AWG
Conductor cross-section, rigid (single-wire/multiwire), min.	1.5 mm²
Humidity, min.	5 %
Humidity, max.	95 %
Max. mains-side overcurrent protection	160 A gL/gG
Maximum back-up fuse	160 A
Maximum discharge current (8/20 µs)	50 kA
Maximum discharge current (8/20 µs) [L-N]	50 kA
Minimum distance	1.5 mm
Installation type	Pre-mounted in the housing
Nominal discharge current (8/20 µs)	30 kA
Nominal discharge current (8/20 µs) [L-N]	30 kA
Nominal voltage AC (50/60 Hz)	230 V
Network form	Other
TN network form	yes
TN-C-S network form	yes
TN-S network form	yes
TT network form	yes
Pole number	1
Ports	One-Port SPD
Residual voltage [L-N] @ 1 kA	0.7 kV
Residual voltage [L-N] @ 12.5 kA	1 kV
Residual voltage [L-N] @ 5 kA	0.8 kV
Residual voltage [L-N] @ 7 kA	0.9 kV
ROHS-conformant	yes
Protection rating	IP66
Protective conductor current	< 2 µA
Protection level	≤1,3 kV
Protection level [L-N]	≤1,3
Protection level [N-PE]	1.3 kV
Signalling on device	Visual
SPD to EN 61643-11	Type 1+2
SPD to IEC 61643-11	Class I+II
SPD to UL 1449	Type 4

Technical data sheet

Combination arrester V50, 1-pole + NPE 280 V

Item number: 5093594

Technical data

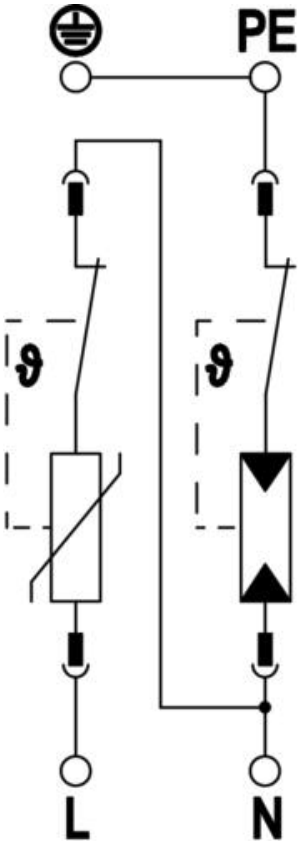

Permitted temperature range, max.	80 °C
Permitted temperature range, min.	-40 °C
TOV voltage [L-N] – fail safe mode – 120 min.	440 V
TOV voltage [L-N] – withstand mode – 5 s	335 V
TOV voltage [N-PE] – withstand mode – 200 ms	1200 V
Approvals	VDE UL ÖVE