Technical data sheet

Combination protection device TELE 4-C for ISDN RJ45

Item number: 5081982

Data line protection device for analogue telecommunications systems

- In aluminium housing
- With 2-stage protection circuit
- Simple mounting
- Incl. 150 mm connection cable with RJ11 and/or RJ45 connectors
- Optimised bandwidth for TC systems
- DIN rail mounting with DLS-BS accessories (5082 38 2)

Application: For analogue telecommunication systems
- In aluminium housing
- Simple mounting on hat rail or on terminal
- Incl. 150 mm connection cable with RJ411 connectors
- Optimised bandwidth for telecommunications systems

LPZ 0→3 | Analog TK | ISDN

Master data

Item number	5081982
Type	RJ45-TELE 4-C
Description 1	Combined protective device
Description 2	for analogue telecommunication
Manufacturer	OBO
Dimension	170V
Smallest sales unit	1
Unit of quantity	Piece
Weight	14 kg
Weight unit	kg/100 pc.
CO2 Footprint (GWP) Cradle-to-Gate	1,6374 kg CO2e / 1 Piece

Dimensions

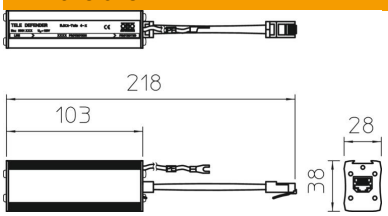

Technical data sheet

Combination protection device TELE 4-C for ISDN RJ45

Item number: 5081982

Technical data

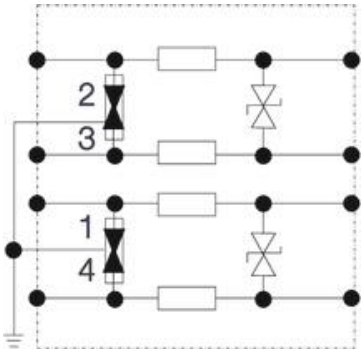

Number of poles	4
Version for	Combi protection, 4 wires
Insertion loss	≤3 dB
Earthing via:	Connection cable
Total discharge current (10/350)	1,5 kA
Total discharge current (8/20)	4 kA
Cut-off frequency	12 MHz
Maximum continuous voltage AC	120 V
Maximum continuous voltage DC	170 V
Insulation resistance	> 34 MΩ
Capacity (wire-wire)	<500 pF
Capacity (wire-earth)	<20 pF
Kategorie	Type 1+2+3 / D1+C2+C1
Lightning protection zone LPZ	0→3
Mounting type	Connector/cable adapter
Nominal load current AC	0.2 A
Nominal load current DC	0.3 A
Testing standard	IEC 61643-21
ROHS-conformant	yes
Protection rating	IP40
Protection level wire-wire	<300 V
Protection level wire-earth	<600 V
Protection level, wire-earth at 1 kV/µs (C3)	<245
Series resistance per wire	8,2 Ω ± 10 %
Signalling on device	Without
SPD to IEC 61643-21	Class I+II+III / D1+C2+C1
Plug-in system	RJ45
Impulse durability wire-wire	C1: 1 kV / 0,5 kA (8/20)
Impulse durability wire-earth	C2: 2 kV / 1 kA (8/20)
Permitted temperature range, max.	80 °C
Permitted temperature range, min.	-40 °C