# Technical data sheet

## Connectable data cable protection, 2-pole, indirect earthing, 48 V
## Item number: 5080315

Pluggable data line protection, type 1+2/D1+C2 for use in measurement and control technology

- Protection device for multi-wire systems
- Indirect shield earthing
- Frequency range up to 100 MHz
- Earthing via DIN rail or connection cable
- Small installation width of 12.5 mm
- High system availability - no signal interruption without protection module

Application: Universal lightning and surge protection for MCR data transmission devices.

MSR LPZ 0→2

### Master data

| | |
|---|---|
| Item number | 5080315 |
| Type | PDP-2-48-I |
| Description 1 | Pluggable data line protection |
| Description 2 | 2 pole indirect earth |
| Manufacturer | OBO |
| Dimension | 48V |
| Smallest sales unit | 1 |
| Unit of quantity | Piece |
| Weight | 6.6 kg |
| Weight unit | kg/100 pc. |
| CO2 Footprint (GWP) Cradle-to-Gate | 0,4264 kg CO2e / 1 Piece |

# Technical data sheet

## Connectable data cable protection, 2-pole, indirect earthing, 48 V

## Item number: 5080315

### Dimensions

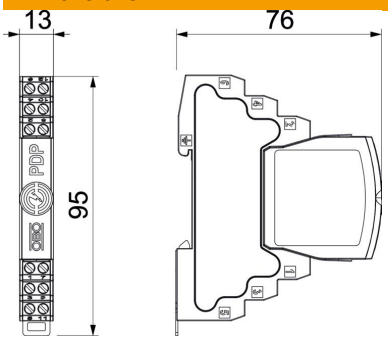


| | |
|---|---|
| Length | 76 mm |
| Width | 13 mm |
| Height | 95 mm |

### Technical data

| | |
|---|---|
| Connection cross-section, flexible, max. | 1.5 mm² |
| Connection cross-section, flexible, min. | 0.14 mm² |
| Connection cross-section, multi-wire, max. | 2.5 mm² |
| Connection cross-section, multi-wire, min. | 0.14 mm² |
| Connection cross-section, rigid, max. | 2.5 mm² |
| Connection cross-section, rigid, min. | 0.14 mm² |
| Number of poles | 2 |
| Version for | 2-pole |
| Insertion loss | ≤3 dB |
| Earthing via: | Connection cable / DIN rail |
| Total discharge current (10/350) | 2,5 kA |
| Total discharge current (8/20) | 20 kA |
| Cut-off frequency | 100 MHz |
| Maximum continuous voltage AC | 37 V |
| Maximum continuous voltage DC | 52 V |
| Lightning impulse current | 2.5 kA |
| Capacity (wire-wire) | ≤30 pF |
| Capacity (wire-earth) | ≤30 pF |
| Kategorie | Type 1+2 / D1+C2 |
| Lightning protection zone LPZ | 0→2 |
| Lengthwise resistance | 1.2 ± 5% |
| Mounting of input / output | Screw terminals |
| Mounting type | DIN rail 35 mm |
| Nominal discharge current (8/20 µs) | 10 kA |
| Nominal load current AC | 0.425 A |
| Nominal load current DC | 0.6 A |
| Total impulse durability into C2 (8/20) | 20 kA |
| Testing standard | IEC 61643-21 |
| ROHS-conformant | yes |
| Shielding connection available | yes |
| Screening | Indirect |

# Technical data sheet

## Connectable data cable protection, 2-pole, indirect earthing, 48 V
## Item number: 5080315

### Technical data

| | |
|---|---|
| Protection rating | IP20 |
| Protection level wire-wire | 170 V |
| Protection level wire-earth | 1600 V |
| Protection level, shield-earth (S-PE) | 1300 V |
| Series resistance per wire | 1,2 Ω ± 5% |
| Signalling on device | None |
| SPD to EN 61643-11 | Type 1+2 |
| SPD to IEC 61643-11 | Class I+II |
| SPD to IEC 61643-21 | Class I+II / D1+C2 |
| Plug-in system | Terminal |
| Impulse durability wire-wire | 10 kV / 5 kA |
| Impulse durability wire-earth | 10 kV / 5 kA |
| Permitted temperature range, max. | 80 °C |
| Permitted temperature range, min. | -40 °C |