Technical data sheet

Connectable data cable protection, 2-pole, direct earthing, 48 V

Item number: 5080307

Pluggable data line protection, type 1+2/D1+C2 for use in measurement and control technology

- Protection device for multi-wire systems
- Direct shield earthing
- Frequency range up to 100 MHz
- Earthing via DIN rail or connection cable
- Installation width from 12.5 mm
- High system availability – no signal interruption without protection module

Application: Universal lightning and surge protection for MCR data transmission devices.

MSR LPZ 0→2

Master data

Item number	5080307
Type	PDP-2-48-D
Description 1	Pluggable data line protection
Description 2	2 pole direct earth
Manufacturer	OBO
Dimension	48V
Smallest sales unit	1
Unit of quantity	Piece
Weight	6.5 kg
Weight unit	kg/100 pc.
CO2 Footprint (GWP) Cradle-to-Gate	0,55 kg CO2e / 1 Piece

Technical data sheet

Connectable data cable protection, 2-pole, direct earthing, 48 V

Item number: 5080307

Dimensions

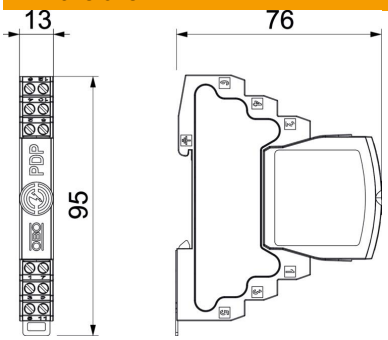

Length	76 mm
Width	13 mm
Height	95 mm

Technical data

Connection cross-section, flexible, max.	1.5 mm²
Connection cross-section, flexible, min.	0.14 mm²
Connection cross-section, multi-wire, max.	2.5 mm²
Connection cross-section, multi-wire, min.	0.14 mm²
Connection cross-section, rigid, max.	2.5 mm²
Connection cross-section, rigid, min.	0.14 mm²
Number of poles	2
Version for	2-pole
Insertion loss	≤3 dB
Earthing via:	Connection cable / DIN rail
Total discharge current (10/350)	5 kA
Total discharge current (8/20)	20 kA
Cut-off frequency	100 MHz
Maximum continuous voltage AC	37 V
Maximum continuous voltage DC	52 V
Lightning impulse current	2.5 kA
Capacity (wire-wire)	≤30 pF
Capacity (wire-earth)	≤30 pF
Kategorie	Type 1+2 / D1+C2
Lightning protection zone LPZ	0→2
Lengthwise resistance	1.2 ± 5%
Mounting of input / output	Screw terminals
Mounting type	DIN rail 35 mm
Nominal discharge current (8/20 µs)	10 kA
Nominal load current AC	0.425 A
Nominal load current DC	0.6 A
Total impulse durability into C2 (8/20)	20 kA
Testing standard	IEC 61643-21
ROHS-conformant	yes
Shielding connection available	yes
Screening	Direct

Technical data sheet

Connectable data cable protection, 2-pole, direct earthing, 48 V

Item number: 5080307

Technical data

Protection rating	IP20
Protection level wire-wire	170 V
Protection level wire-earth	850 V
Series resistance per wire	1,2 Ω ± 5%
Signalling on device	None
SPD to EN 61643-11	Type 1+2
SPD to IEC 61643-11	Class I+II
SPD to IEC 61643-21	Class I+II / D1+C2
Plug-in system	Terminal
Impulse durability wire-wire	10 kV / 5 kA
Impulse durability wire-earth	10 kV / 5 kA
Permitted temperature range, max.	80 °C
Permitted temperature range, min.	-40 °C