Technical data sheet

Earthing clamp, type 952

Item number: 5052181

- For pipes 1/2-2" or Ø 11.5-60 mm
- Connection options: conductors 16-70 mm² and/or round conductors to Rd 10 with captive pressure strip from stainless steel
- With 2 hexagonal bolts M6 x 16 and 2 hexagonal bolts M6 x 20 from hot-dip galvanised steel
- Top section of clamp with cast contact point from die-cast zinc, bottom section of clamp from hot-dip galvanised steel

St Steel

FT Hot-dip galvanised

Master data

Item number	5052181
Type	952 Z 2
Description 1	Earthing clamp
Description 2	for steel strip
Manufacturer	OBO
Dimension	2"
Material	Steel
Surface	Hot-dip galvanised
Surface standard	DIN EN ISO 1461
Smallest sales unit	5
Unit of quantity	Piece
Weight	38.52 kg
Weight unit	kg/100 pc.
CO2 Footprint (GWP) Cradle-to-Gate	1,0852 kg CO2e / 1 Piece

Technical data sheet

Earthing clamp, type 952

Item number: 5052181

Dimensions

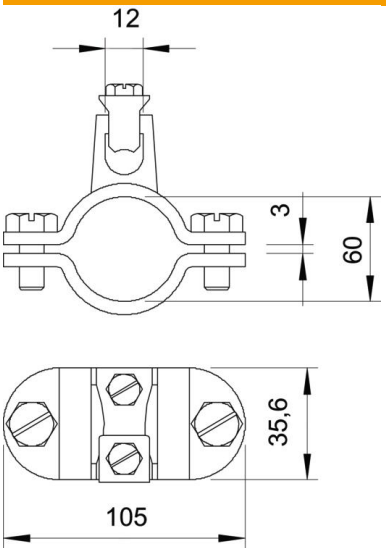

Dimension A	105 mm
Dimension D	60 mm
Dimension X	3 mm

Technical data

Number of conductors	1
Cross-section of cable to be connected, max.	70 mm²
Cross-section of cable to be connected, min.	16 mm²
ROHS-conformant	yes
Clamping range D	2
Clamping range D, max.	60 mm
Clamping range D, min.	57 mm