Technical data sheet

Earthing clamp, type 952

Item number: 5052114

- For pipes 1/2-2" or Ø 11.5-60 mm
- Connection options: conductors 16-70 mm² and/or round conductors to Rd 10 with captive pressure strip from stainless steel
- With 2 hexagonal bolts M6 x 16 and 2 hexagonal bolts M6 x 20 from hot-dip galvanised steel
- Top section of clamp with cast contact point from die-cast zinc, bottom section of clamp from hot-dip galvanised steel

St	Steel
FT	Hot-dip galvanised

Master data

Item number	5052114
Type	952 Z 1
Description 1	Earthing clamp
Description 2	for steel strip
Manufacturer	OBO
Dimension	1"
Material	Steel
Surface	Hot-dip galvanised
Surface standard	DIN EN ISO 1461
Smallest sales unit	5
Unit of quantity	Piece
Weight	28.56 kg
Weight unit	kg/100 pc.
CO2 Footprint (GWP) Cradle-to-Gate	0,8798 kg CO2e / 1 Piece

Technical data sheet

Earthing clamp, type 952

Item number: 5052114

Dimensions

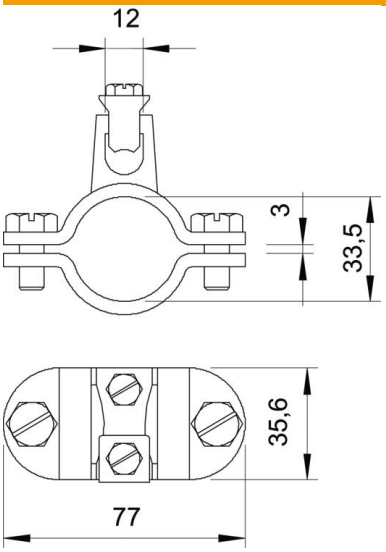

Dimension A	77 mm
Dimension D	33.5 mm
Dimension X	3 mm

Technical data

Number of conductors	1
Cross-section of cable to be connected, max.	70 mm²
Cross-section of cable to be connected, min.	16 mm²
ROHS-conformant	yes
Clamping range D	1
Clamping range D, max.	33.5 mm
Clamping range D, min.	30.5 mm