Technical data sheet

MMS-plus P 6x50 round head tie, with pan head

Item number: 3498108

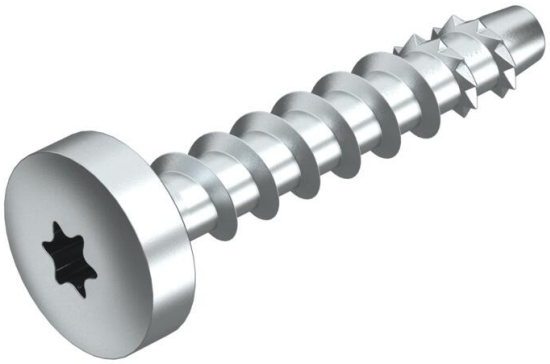

Bolt tie for direct mounting without additional anchors in cracked and uncracked concrete and masonry. With round head for universal fastenings. Torx drive T30.

Construction product tested according to EAD and CE mark, with European Technical Assessment (ETA) and proof of suitability. Load-bearing capacities under fire loads proven up to fire resistance class R120.

St	Steel
G	Electrogalvanised

Master data

Item number	3498108
Type	MMS+ P 6x50
Description 1	Screw anchor
Description 2	with panhead
Manufacturer	OBO
Dimension	6x50mm
Colour	zinc
Material	Steel
Surface	Electrogalvanised
Surface standard	EN ISO 19598 / EN ISO 4042
Smallest sales unit	100
Unit of quantity	Piece
Weight	1 kg
Weight unit	kg/100 pc.

Technical data sheet

MMS-plus P 6x50 round head tie, with pan head

Item number: 3498108

Dimensions

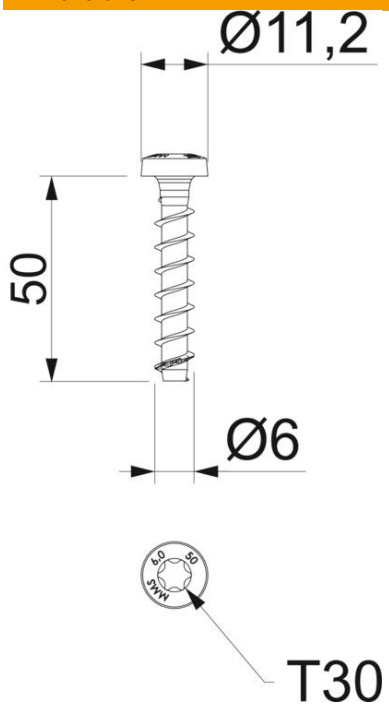

Dimension	6 x 50
Length	50 mm
Dimension L	50 mm

Technical data

Anchor/nail/bolt version	Spiral anchor
Drill hole depth	50 mm
Drill hole diameter, min.	5 mm
Hardened	yes
Thread	6
Thread diameter ST	6
Clamping strength	15 mm
Head diameter	11.2 mm
Head shape	Cup head
ROHS-conformant	yes
Screw system	Torx
Fire resistance class EN 13501-1	R30 R60 R90 R120