Technical data sheet

Series clip, black

Item number: 2254522

Also suitable for rails of 11 ÷ 12 mm slot width; polystyrene clip element, impact resistant, halogen-free, light grey RAL 7035; metal parts: electrogalvanised steel.

HALOGEN FREE CE 11-12

PS Polystyrene

Master data

Item number	2254522
Type	2050 5-25 RW
Description 1	Series clip
Description 2	with cross-head screw
Manufacturer	OBO
Dimension	5-25mm
Colour	Pure white; RAL 9010
Material	Polystyrene
Smallest sales unit	100
Unit of quantity	Piece
Weight	0.631 kg
Weight unit	kg/100 pc.
CO2 Footprint (GWP) Cradle-to-Gate	0,0227 kg CO2e / 1 Piece

Technical data sheet

Series clip, black

Item number: 2254522

Dimensions

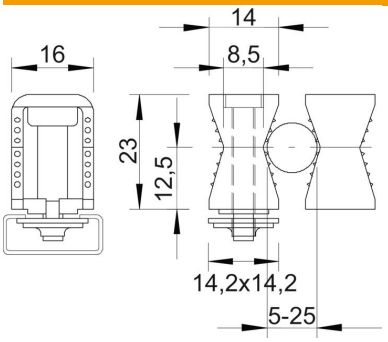

Dimension B	14 mm
Dimension B1	7.5 mm
Dimension H	24 mm
Dimension H1	12.5 mm

Technical data

Distance to the wall	no
Number of cables/pipes	1
Fastening type	Rail fastening
for rail with slot width (with interval), max.	12 mm
for rail with slot width (with interval), min.	11 mm
Suitable in fire protection area	no
Halogen-free	yes
Plastic-covered	no
Nominal diameter	25 mm
ROHS-conformant	Exempt
Impact-resistant	yes
Bolt	M4 x 30
Clamping range D, max.	25 mm
Clamping range D, min.	5 mm
UV-resistant	no