Technical data sheet

Collecting clamp Grip 40, plastic

Item number: 2205420

Collection clamp with pointed fastening element, for the mounting of up to 40 cables NYM 3 x 1
Fastening with impact anchor or push-fit anchor. Also suitable for the fastening with gas- and battery-operated setting tools of the brands Bosch, Fischer and Spit (inner nose diameter Ø 7 mm). Fastening hole: Ø 6 mm. Recommended fastening distance of 250–400 cm when fully assigned, depending on the respective applicable national specifications/norms.
With multifunctional fastening element. Capacity: 2031/ 40 max. 40 cables NYM 3 x 1.5 mm²

PP Polypropylene

Master data

Item number	2205420
Type	2031 40 SP
Description 1	Grip collecting clamp
Manufacturer	OBO
Dimension	40x NYM3x1,5
Colour	Light grey; RAL 7035
Material	Polypropylene
Smallest sales unit	50
Unit of quantity	Piece
Weight	3.28 kg
Weight unit	kg/100 pc.
CO2 Footprint (GWP) Cradle-to-Gate	0,1155 kg CO2e / 1 Piece

Technical data sheet

Collecting clamp Grip 40, plastic

Item number: 2205420

Dimensions

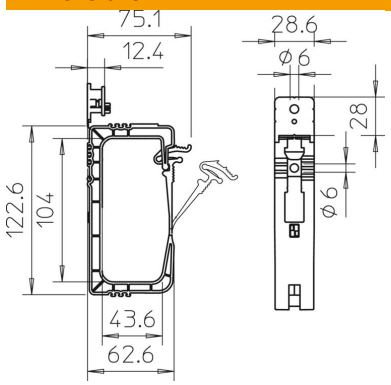

Technical data

No. of conductors NYM 3 x 1.5	40
Flame-resistant version	no
Breaking load	0.32 kN
Maintain electrical functions	no
Halogen-free	yes
With anchor	no
ROHS-conformant	yes