Technical data sheet

Cap nut cable gland, EMC, metric thread, nickel-plated

Item number: 2086219

With metric connecting thread to IEC 423, robust EMV cap-nut cable gland with large sealing area. Strain relief, wringing protection and tightness over the whole clamping area. Neoprene sealing ring. Polyamide terminal insert. With pre-mounted O sealing ring on connection thread, VDE-tested to DIN EN 50262, protection rating IP 68 at 5 bar for 1 hr.

* Prices according to DEL notation.

IP 68 M

CuZn 37 Brass

N Nickel-plated

Master data

Item number	2086219
Type	V-TEC VM32 EMV
Description 1	Cable gland EMV
Description 2	for cable with shielding
Manufacturer	OBO
Dimension	M32
Material	Brass
Surface Surface standard	Nickel-plated
Smallest sales unit	20
Unit of quantity	Piece
Weight	7.662 kg
Weight unit	kg/100 pc.
CO2 Footprint (GWP) Cradle-to-Gate	0,1919 kg CO2e / 1 Piece

Technical data sheet

Cap nut cable gland, EMC, metric thread, nickel-plated

Item number: 2086219

Dimensions

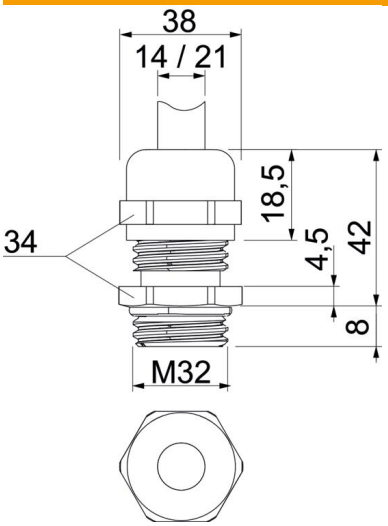

Dimension E	38 mm
Dimension L max.	42 mm
Dimension L1	8 mm
Dimension L2	4.5 mm
Dimension L3	18.5 mm

Technical data

Type of seal	Sealing ring
Version for	Straight
Bend protection	no
Sealing area D, max.	21 mm
Sealing area D, min.	14 mm
Flat cable gland	no
For Ex zone	Without
Thread	M32 x 1,5
Thread type	Metric
Thread length	8 mm
Fibre-glass reinforced	no
Halogen-free	no
Unstable torque	12 Nm
Impact category	6
Strain relief category	A
Sealing insert, multiple	no
With locknut	no
ROHS-conformant	Exempt
Impact-resistant	no
WAF	34
Protection rating	IP68
Permitted temperature range, max.	100 °C
Permitted temperature range, min.	-20 °C
Strain relief option	yes