Technical data sheet

Cap nut cable gland, EMC spring contact, metric thread, nickel-plated
Item number: 2086177

With metric connecting thread to IEC 423, robust EMV cap-nut cable gland with large sealing area. The contact between the gland and braided shield is made using a contact spring. Strain relief, wringing protection and tightness over the whole clamping area. Neoprene sealing ring. Polyamide terminal insert. With pre-mounted O sealing ring on connection thread, protection rating IP 68 at 5 bar for 1 hr.

* Prices according to DEL notation.

CE UKCA IP 68 M

CuZn 37 Brass

N Nickel-plated

Master data

Item number	2086177
Type	V-TEC VM32 EMV-K
Description 1	Cable gland EMV
Description 2	contact spring-shielded cable
Manufacturer	OBO
Dimension	M32
Material	Brass
Surface Surface standard	Nickel-plated
Smallest sales unit	20
Unit of quantity	Piece
Weight	9.88 kg
Weight unit	kg/100 pc.
CO2 Footprint (GWP) Cradle-to-Gate	0,251 kg CO2e / 1 Piece

Technical data sheet

Cap nut cable gland, EMC spring contact, metric thread, nickel-plated
Item number: 2086177

Dimensions

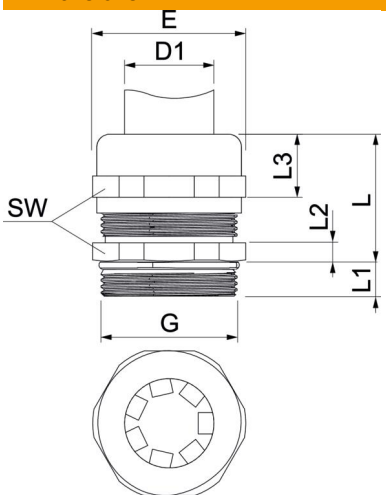

Length	34 mm
Width	38 mm
Height	38 mm
Dimension D1	14 mm
Dimension E	36 mm
Dimension G	M32x1,5 mm
Dimension L	30 mm
Dimension L1	8 mm
Dimension L2	4.5 mm
Dimension L3	16.5 mm

Technical data

Type of seal	Sealing ring
Version for	Straight
Bend protection	no
Sealing area D, max.	21 mm
Sealing area D, min.	14 mm
Flat cable gland	no
For Ex zone	Without
Thread	M32 x 1,5
Thread length	8 mm
Fibre-glass reinforced	no
Halogen-free	no
Sealing insert, multiple	no
With locknut	no
ROHS-conformant	Exempt
Impact-resistant	no
WAF	34
Protection rating	IP68
Permitted temperature range, max.	100 °C
Permitted temperature range, min.	-20 °C
Strain relief option	yes