Technical data sheet

Cap nut cable gland, metric thread, silver grey, long, nickel-plated

Item number: 2086135

With metric connecting thread to IEC 423, robust cap nut cable gland with large sealing area. Strain relief, wringing protection and tightness over the whole clamping area. For thicker housing wall thicknesses in conjunction in with locknuts. Neoprene sealing ring. Polyamide terminal insert. With pre-mounted sealing ring on connection thread, VDE-tested to DIN EN 50262, protection rating IP 68 at 5 bar for 1 hr.

With long connection thread.

* Prices according to DEL notation.

IP 68 M

CuZn 37 Brass

N Nickel-plated

Master data

Item number	2086135
Type	V-TEC VM LM32 MS
Description 1	Cable gland
Description 2	with long connection thread
Manufacturer	OBO
Dimension	M32
Material	Brass
Surface Surface standard	Nickel-plated
Smallest sales unit	10
Unit of quantity	Piece
Weight	9.15 kg
Weight unit	kg/100 pc.
CO2 Footprint (GWP) Cradle-to-Gate	0,2 kg CO2e / 1 Piece

Technical data sheet

Cap nut cable gland, metric thread, silver grey, long, nickel-plated

Item number: 2086135

Dimensions

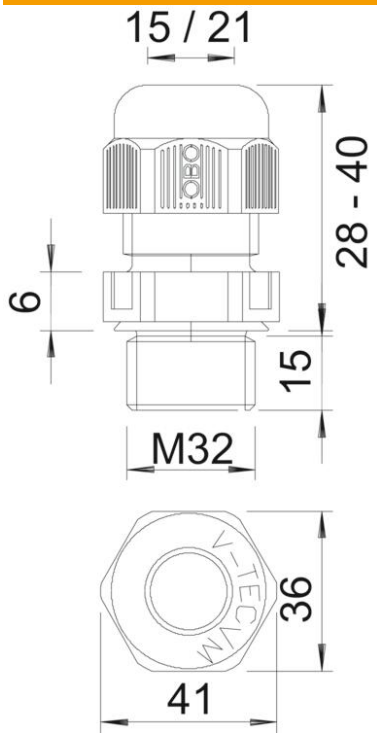

Dimension E	36 mm
Dimension L max.	30 mm
Dimension L1	13 mm
Dimension L2	4.5 mm
Dimension L3	18.5 mm

Technical data

Type of seal	Sealing ring
Version for	Straight
Bend protection	no
Sealing area D, max.	21 mm
Sealing area D, min.	14 mm
explosion-proof	no
Flat cable gland	no
For Ex zone	Without
Thread	M32 x 1,5
Thread type	Metric
Thread length	13 mm
Fibre-glass reinforced	no
Halogen-free	no
Sealing insert, multiple	no
With locknut	no
ROHS-conformant	yes
Impact-resistant	no
WAF	34
Protection rating	IP68
Permitted temperature range, max.	100 °C
Permitted temperature range, min.	-20 °C

Technical data

Strain relief option	yes