Technical data sheet

Cap nut cable gland, metric thread, silver grey, nickel-plated

Item number: 2086024

With metric connecting thread to IEC 423, robust cap nut cable gland with large sealing area. Strain relief, wringing protection and tightness over the whole clamping area. Neoprene sealing ring. Polyamide terminal insert. With pre-mounted O sealing ring on connection thread, VDE-tested to DIN EN 50262, protection rating IP68 at 5 bar for 1 hr, max. permitted ambient temperature -20 to +100°C.

* Prices according to DEL notation.

IP 68 M

CuZn 37 Brass

N Nickel-plated

Master data

Item number	2086024
Type	V-TEC VM16 MS
Description 1	Cable gland
Manufacturer	OBO
Dimension	M16
Material	Brass
Surface	Nickel-plated
Surface standard	
Smallest sales unit	50
Unit of quantity	Piece
Weight	1.64 kg
Weight unit	kg/100 pc.
CO2 Footprint (GWP) Cradle-to-Gate	0,0419 kg CO2e / 1 Piece

Technical data sheet

Cap nut cable gland, metric thread, silver grey, nickel-plated

Item number: 2086024

Dimensions

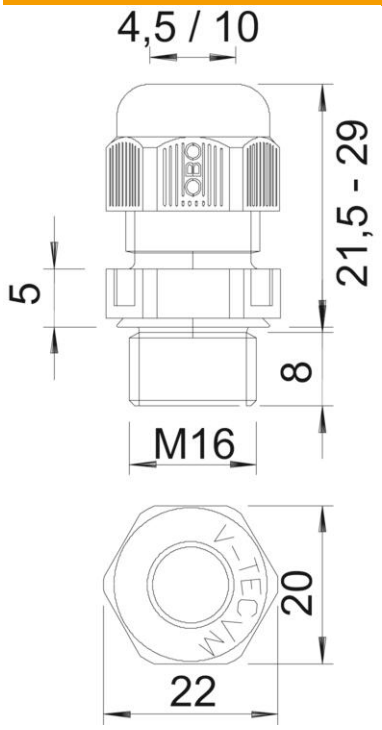

Dimension E	19 mm
Dimension L max.	24 mm
Dimension L1	5 mm
Dimension L2	3 mm
Dimension L3	15 mm

Technical data

Type of seal	Sealing ring
Version for	Straight
Bend protection	no
Sealing area D, max.	9 mm
Sealing area D, min.	5 mm
explosion-proof	no
Flat cable gland	no
For Ex zone	Without
Thread	M16 x 1,5
Thread type	Metric
Thread length	5 mm
Fibre-glass reinforced	no
Halogen-free	no
Unstable torque	3.5 Nm
Impact category	5
Strain relief category	A
Sealing insert, multiple	no
With locknut	no
ROHS-conformant	Exempt
Impact-resistant	no
WAF	17
Protection rating	IP68

Technical data sheet

Cap nut cable gland, metric thread, silver grey, nickel-plated

Item number: 2086024

Technical data

Hexagonal corner dimension	19 mm
Permitted temperature range, max.	100 °C
Permitted temperature range, min.	-20 °C
Strain relief option	yes