Technical data sheet

Cap nut cable gland, PG thread, nickel-plated

Item number: 2085690

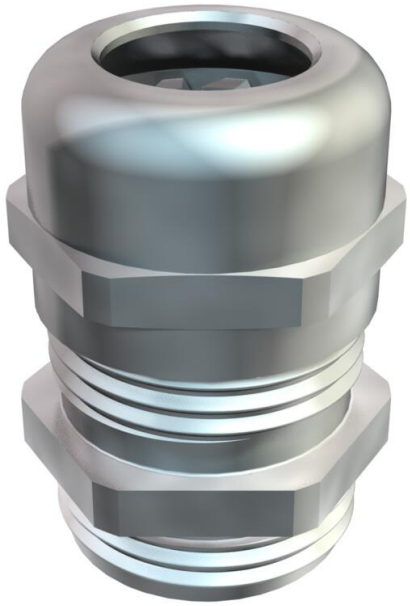

Cable gland of cap-nut design with large sealing area, and strain relief and torsion protection for high sealing demands with Pg connection thread to DIN 40430, polyamide terminal insert, sealing ring of chloroprene/nitrile rubber, with pre-mounted O ring on the connection thread.

Protection rating IP 68 at 5 bar: 1 hr, tested to DIN EN 62444.

"Normal" connection thread length, according to DIN 46320.

* Prices according to DEL notation.

CE UKCA IP 68 Pg

CuZn 37 Brass

N Nickel-plated

Master data

Item number	2085690
Type	V-TEC PG42 MS
Description 1	Cable gland
Manufacturer	OBO
Dimension	PG42
Material	Brass
Surface	Nickel-plated
Surface standard	
Smallest sales unit	5
Unit of quantity	Piece
Weight	23.5 kg
Weight unit	kg/100 pc.
CO2 Footprint (GWP) Cradle-to-Gate	0,8629 kg CO2e / 1 Piece

Technical data sheet

Cap nut cable gland, PG thread, nickel-plated

Item number: 2085690

Dimensions

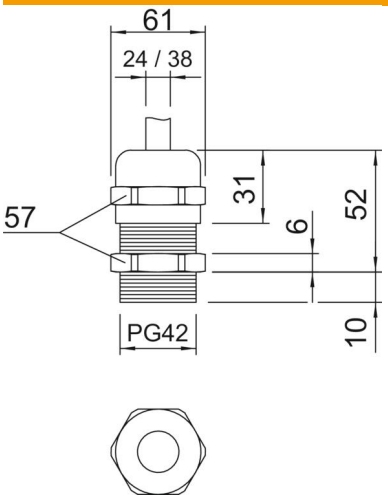

Dimension E	61 mm
Dimension L max.	52 mm
Dimension L1	10 mm
Dimension L2	6 mm
Dimension L3	31 mm

Technical data

Type of seal	Sealing ring
Version for	Straight
Bend protection	no
Sealing area D, max.	38 mm
Sealing area D, min.	24 mm
explosion-proof	no
Flat cable gland	no
For Ex zone	Without
For Ex zone gas	Without
For Ex zone dust	Without
Thread	Pg 42
Thread type	PG
Thread length	10 mm
Nominal thread size	42
Fibre-glass reinforced	no
Halogen-free	no
Sealing insert, multiple	no
With locknut	no
ROHS-conformant	Exempt
Impact-resistant	no
WAF	57
Protection rating	IP68
Splittable gland	no
Permitted temperature range, max.	100 °C
Permitted temperature range, min.	-20 °C
Strain relief and wringing protection D2, max.	38 mm
Strain relief and wringing protection D2, min.	26 mm
Strain relief option	yes