Technical data sheet

Cap nut cable gland, PG thread, nickel-plated

Item number: 2085674

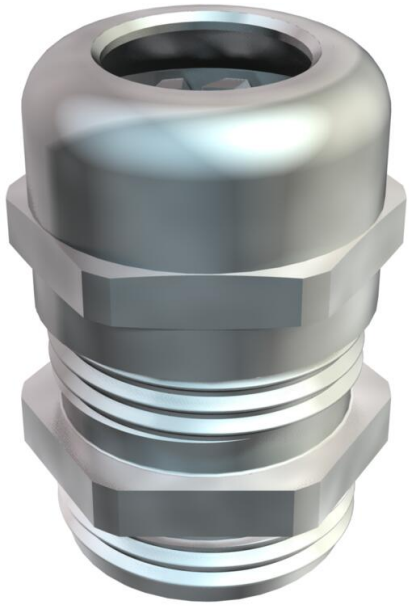

Cable gland of cap-nut design with large sealing area, and strain relief and torsion protection for high sealing demands with Pg connection thread to DIN 40430, polyamide terminal insert, sealing ring of chloroprene/nitrile rubber, with pre-mounted O ring on the connection thread.

Protection rating IP 68 at 5 bar: 1 hr, tested to DIN EN 62444.

"Normal" connection thread length, according to DIN 46320.

* Prices according to DEL notation.

CE UKCA IP 68 Pg

CuZn 37 Brass

N Nickel-plated

Master data

Item number	2085674
Type	V-TEC PG29 MS
Description 1	Cable gland
Manufacturer	OBO
Dimension	PG29
Material	Brass
Surface	Nickel-plated
Surface standard	
Smallest sales unit	20
Unit of quantity	Piece
Weight	13 kg
Weight unit	kg/100 pc.
CO2 Footprint (GWP) Cradle-to-Gate	0,3759 kg CO2e / 1 Piece

Technical data sheet

Cap nut cable gland, PG thread, nickel-plated

Item number: 2085674

Dimensions

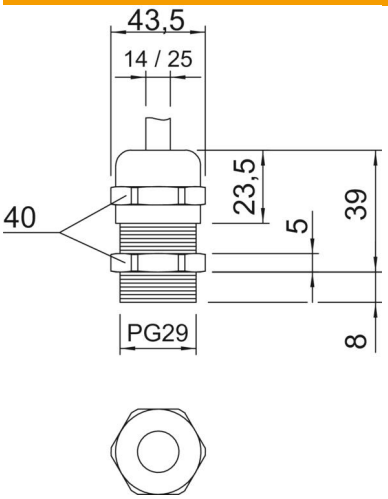

Dimension E	43.5 mm
Dimension L max.	39 mm
Dimension L1	8 mm
Dimension L2	5 mm
Dimension L3	23.5 mm

Technical data

Type of seal	Sealing ring
Version for	Straight
Bend protection	no
Sealing area D, max.	25 mm
Sealing area D, min.	14 mm
explosion-proof	no
Flat cable gland	no
For Ex zone	Without
For Ex zone gas	Without
For Ex zone dust	Without
Thread	Pg 29
Thread type	PG
Thread length	8 mm
Nominal thread size	29
Fibre-glass reinforced	no
Halogen-free	no
Sealing insert, multiple	no
With locknut	no
ROHS-conformant	Exempt
Impact-resistant	no
WAF	40
Protection rating	IP68
Splittable gland	no
Permitted temperature range, max.	100 °C
Permitted temperature range, min.	-20 °C
Strain relief and wringing protection D2, max.	25 mm
Strain relief and wringing protection D2, min.	17 mm
Strain relief option	yes