# Technical data sheet

## Cap nut cable gland, PG thread, nickel-plated

## Item number: 2085631

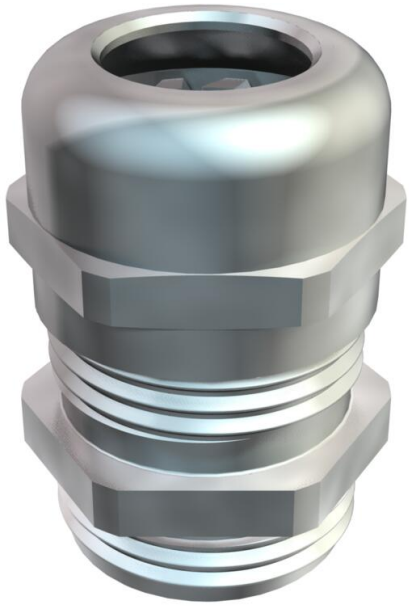

Cable gland of cap-nut design with large sealing area, and strain relief and torsion protection for high sealing demands with Pg connection thread to DIN 40430, polyamide terminal insert, sealing ring of chloroprene/nitrile rubber, with pre-mounted O ring on the connection thread.

Protection rating IP 68 at 5 bar: 1 hr, tested to DIN EN 62444.

"Normal" connection thread length, according to DIN 46320.

* Prices according to DEL notation.

CuZn 37 Brass

N Nickel-plated

### Master data

| | |
|---|---|
| Item number | 2085631 |
| Type | V-TEC PG13 MS |
| Description 1 | Cable gland |
| Manufacturer | OBO |
| Dimension | PG13,5 |
| Material | Brass |
| Surface | Nickel-plated |
| Surface standard | |
| Smallest sales unit | 50 |
| Unit of quantity | Piece |
| Weight | 2.8 kg |
| Weight unit | kg/100 pc. |
| CO2 Footprint (GWP) Cradle-to-Gate | 0,1078 kg CO2e / 1 Piece |

# Technical data sheet

## Cap nut cable gland, PG thread, nickel-plated

## Item number: 2085631

### Dimensions

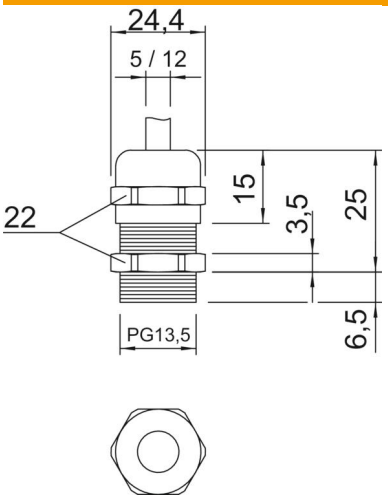


| | |
|---|---|
| Dimension E | 24.4 mm |
| Dimension L max. | 25 mm |
| Dimension L1 | 6.5 mm |
| Dimension L2 | 3.5 mm |
| Dimension L3 | 15 mm |

### Technical data

| | |
|---|---|
| Type of seal | Sealing ring |
| Version for | Straight |
| Bend protection | no |
| Sealing area D, max. | 12 mm |
| Sealing area D, min. | 5 mm |
| explosion-proof | no |
| Flat cable gland | no |
| For Ex zone | Without |
| For Ex zone gas | Without |
| For Ex zone dust | Without |
| Thread | Pg 13,5 |
| Thread type | PG |
| Thread length | 6.5 mm |
| Nominal thread size | 13.5 |
| Fibre-glass reinforced | no |
| Halogen-free | no |
| Sealing insert, multiple | no |
| With locknut | no |
| ROHS-conformant | Exempt |
| Impact-resistant | no |
| WAF | 22 |
| Protection rating | IP68 |
| Splittable gland | no |
| Permitted temperature range, max. | 100 °C |
| Permitted temperature range, min. | -20 °C |
| Strain relief and wringing protection D2, max. | 12 mm |
| Strain relief and wringing protection D2, min. | 6 mm |
| Strain relief option | yes |