Technical data sheet

Cone cable gland, metric thread, small cutting ring, nickel-plated
Item number: 2083647

Cable gland with hexagonal intermediate connector, shape C4, to DIN 46320 with metric connection thread to DIN EN 60423 and ISO 68. Pressure rings made of electrogalvanised and transparently passivated steel.

NR/SBR sealing ring.

Protection rating: with connection thread sealing ring IP 65, without connection thread sealing ring IP 54.

With simple sealing ring, with small internal diameter.

* Prices according to DEL notation.

CE UKCA IP 54 IP 65 M

CuZn 37 Brass

N Nickel-plated

Master data

Item number	2083647
Type	163 MS M25
Description 1	Cable gland
Manufacturer	OBO
Dimension	M25
Material	Brass
Surface	Nickel-plated
Surface standard	
Smallest sales unit	25
Unit of quantity	Piece
Weight	4.55 kg
Weight unit	kg/100 pc.
CO2 Footprint (GWP) Cradle-to-Gate	0,0979 kg CO2e / 1 Piece

Technical data sheet

Cone cable gland, metric thread, small cutting ring, nickel-plated

Item number: 2083647

Dimensions

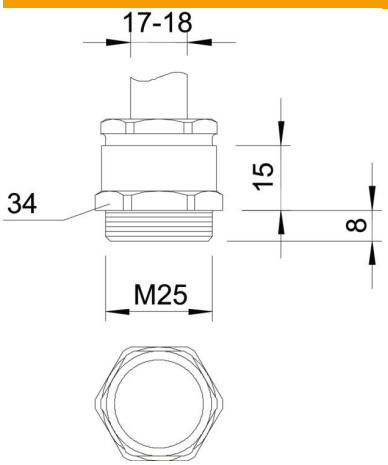

Dimension E	35.5 mm
Dimension L1	8 mm
Dimension L2	15 mm

Technical data

Type of seal	Sealing ring
Bend protection	no
Sealing area D, max.	19 mm
Sealing area D, min.	17 mm
explosion-proof	no
Flat cable gland	no
For Ex zone	Without
Thread	M25 x 1,5
Thread type	Metric
Thread length	8 mm
Fibre-glass reinforced	no
Halogen-free	no
Sealing insert, multiple	no
With locknut	no
ROHS-conformant	Exempt
Impact-resistant	no
WAF 1	34 mm
WAF 2	28 mm
Protection rating	IP65
Strain relief option	no