Technical data sheet

Cone cable gland, metric thread, small cutting ring, nickel-plated
Item number: 2083639

Cable gland with hexagonal intermediate connector, shape C4, to DIN 46320 with metric connection thread to DIN EN 60423 and ISO 68. Pressure rings made of electrogalvanised and transparently passivated steel.

NR/SBR sealing ring.

Protection rating: with connection thread sealing ring IP 65, without connection thread sealing ring IP 54.

With simple sealing ring, with small internal diameter.

* Prices according to DEL notation.

CE UKCA IP 54 IP 65 M

CuZn 37 Brass

N Nickel-plated

Master data

Item number	2083639
Type	163 MS M20
Description 1	Cable gland
Manufacturer	OBO
Dimension	M20
Material	Brass
Surface	Nickel-plated
Surface standard	
Smallest sales unit	25
Unit of quantity	Piece
Weight	2.21 kg
Weight unit	kg/100 pc.
CO2 Footprint (GWP) Cradle-to-Gate	0,0522 kg CO2e / 1 Piece

Technical data sheet

Cone cable gland, metric thread, small cutting ring, nickel-plated
Item number: 2083639

Dimensions

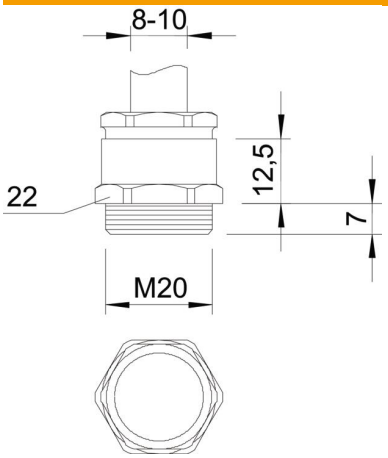

Dimension E	24.4 mm
Dimension L1	7 mm
Dimension L2	12.5 mm

Technical data

Type of seal	Sealing ring
Bend protection	no
Sealing area D, max.	10 mm
Sealing area D, min.	8 mm
explosion-proof	no
Flat cable gland	no
For Ex zone	Without
Thread	M20 x 1,5
Thread type	Metric
Thread length	7 mm
Fibre-glass reinforced	no
Halogen-free	no
Sealing insert, multiple	no
With locknut	no
ROHS-conformant	Exempt
Impact-resistant	no
WAF 1	22 mm
WAF 2	20 mm
Protection rating	IP54
Strain relief option	no