Technical data sheet

Cone cable gland, PG thread, cutting ring, nickel-plated

Item number: 2082624

Cable gland with hexagonal intermediate connector, shape C4, to DIN 46320 with Pg connection thread to DIN 40430.

Pressure rings made of electrogalvanised and transparently passivated steel.

NR/SBR sealing ring.

Protection rating: with connection thread sealing ring IP 65, without connection thread sealing ring IP 54.

With cutting ring.

* Prices according to DEL notation.

CE UKCA IP 54 IP 65 Pg

CuZn 37 Brass

N Nickel-plated

Master data

Item number	2082624
Type	162 MS PG42
Description 1	Cable gland
Description 2	with cutting ring
Manufacturer	OBO
Dimension	PG42
Material	Brass
Surface Surface standard	Nickel-plated
Smallest sales unit	5
Unit of quantity	Piece
Weight	25 kg
Weight unit	kg/100 pc.
CO2 Footprint (GWP) Cradle-to-Gate	1,0044 kg CO2e / 1 Piece

Technical data sheet

Cone cable gland, PG thread, cutting ring, nickel-plated

Item number: 2082624

Dimensions

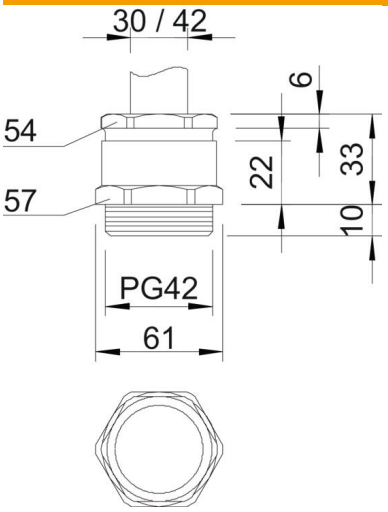

Dimension E	61 mm
Dimension L	33 mm
Dimension L max.	33 mm
Dimension L1	10 mm
Dimension L2	22 mm
Dimension L3	6 mm

Technical data

Type of seal	Cuttable sealing ring
Bend protection	no
Sealing area D, max.	42 mm
Sealing area D, min.	30 mm
explosion-proof	no
Flat cable gland	no
For Ex zone	Without
Thread	Pg 42
Thread type	PG
Thread length	10 mm
Fibre-glass reinforced	no
Halogen-free	no
Sealing insert, multiple	no
With locknut	no
ROHS-conformant	Exempt
Impact-resistant	no
WAF 1	57 mm
WAF 2	54 mm
Protection rating	IP54
Permitted temperature range, max.	65 °C
Permitted temperature range, min.	-20 °C
Strain relief option	no