# Technical data sheet

## Cone cable gland, PG thread, small cutting ring, nickel-plated

## Item number: 2082411

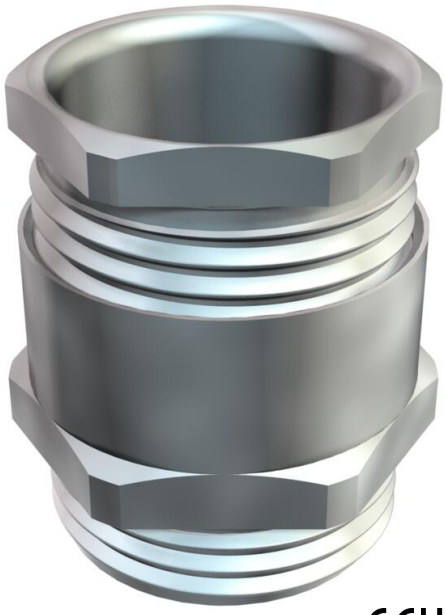

Cable gland with hexagonal intermediate connector, shape C4, to DIN 46320 with Pg connection thread to DIN 40430.

Pressure rings made of electrogalvanised and transparently passivated steel.

NR/SBR sealing ring.

Protection rating: with connection thread sealing ring IP 65, without connection thread sealing ring IP 54.

With simple sealing ring, with small internal diameter.

* Prices according to DEL notation.

CE UKCA IP 54 IP 65 Pg

CuZn 37 Brass

N Nickel-plated

### Master data

| | |
|---|---|
| Item number | 2082411 |
| Type | 163 MS PG42 |
| Description 1 | Cable gland |
| Manufacturer | OBO |
| Dimension | PG42 |
| Material | Brass |
| Surface | Nickel-plated |
| Surface standard | |
| Smallest sales unit | 5 |
| Unit of quantity | Piece |
| Weight | 20.54 kg |
| Weight unit | kg/100 pc. |
| CO2 Footprint (GWP) Cradle-to-Gate | 1,0249 kg CO2e / 1 Piece |

# Technical data sheet

## Cone cable gland, PG thread, small cutting ring, nickel-plated

## Item number: 2082411

### Dimensions

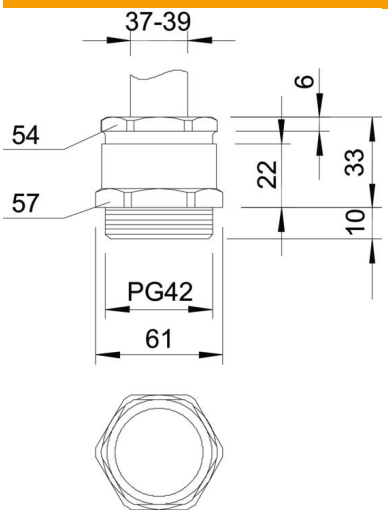


| | |
|---|---|
| Dimension E | 61 mm |
| Dimension L | 33 mm |
| Dimension L max. | 33 mm |
| Dimension L1 | 10 mm |
| Dimension L2 | 22 mm |
| Dimension L3 | 6 mm |

### Technical data

| | |
|---|---|
| Type of seal | Sealing ring |
| Bend protection | no |
| Sealing area D, max. | 39 mm |
| Sealing area D, min. | 37 mm |
| explosion-proof | no |
| Flat cable gland | no |
| For Ex zone | Without |
| Thread | Pg 42 |
| Thread type | PG |
| Thread length | 10 mm |
| Fibre-glass reinforced | no |
| Halogen-free | no |
| Sealing insert, multiple | no |
| With locknut | no |
| ROHS-conformant | Exempt |
| Impact-resistant | no |
| WAF 1 | 57 mm |
| WAF 2 | 54 mm |
| Protection rating | IP54 |
| Strain relief option | no |