Technical data sheet

Black powder-coated steel bend, with thread

Item number: 2046795

90° bend for electrical installation pipes according to EN 61386-1 with threaded ends to DIN EN 60423. With burr-free inner wall.
One connection sleeve is already screwed onto each pipe bend.

M E30 E90

St Steel

PE50 PES50 - Polyester/epoxy

Master data

Item number	2046795
Type	SBNM25 SW
Description 1	Conduit threaded bend
Description 2	with threaded coupler
Manufacturer	OBO
Dimension	M25x1,5
Colour	Jet black; RAL 9005
Material	Steel
Surface	PES50 - Polyester/epoxy
Surface standard	
Smallest sales unit	25
Unit of quantity	Piece
Weight	33 kg
Weight unit	kg/100 pc.
CO2 Footprint (GWP) Cradle-to-Gate	0,8651 kg CO2e / 1 Piece

Technical data sheet

Black powder-coated steel bend, with thread

Item number: 2046795

Dimensions

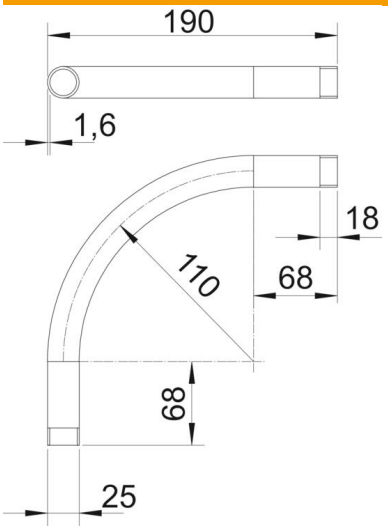

Dimension A	68 mm
Dimension B	190 mm
Dimension D	25 mm
Dimension l	18 mm
Dimension m (mm)	M25
Dimension R	110 mm
Dimension t	1.6 mm

Technical data

Version for	Thread
Flexible	no
For nominal pipe diameter	25 mm
Thread	M25x1,5
Halogen-free	no
With inspection opening and lid	no
With sleeve	yes
Brushed surface	no
Polished surface	no
ROHS-conformant	yes
Angle of the bend	90 °
Two-part	no