Technical data sheet

Hot-dip galvanised steel bend, with thread

Item number: 2046791

90° bend for electrical installation pipes according to EN 61386-1 with threaded ends to DIN EN 60423. With burr-free inner wall.
One connection sleeve is already screwed onto each pipe bend.

M E30 E90

St Steel

FT Hot-dip galvanised

Master data

Item number	2046791
Type	SBNM50 FT
Description 1	Conduit threaded bend
Description 2	with threaded coupler
Manufacturer	OBO
Dimension	M50x1,5
Material	Steel
Surface	Hot-dip galvanised
Surface standard	DIN EN ISO 1461
Smallest sales unit	5
Unit of quantity	Piece
Weight	125.8 kg
Weight unit	kg/100 pc.
CO2 Footprint (GWP) Cradle-to-Gate	4,7031 kg CO2e / 1 Piece

Technical data sheet

Hot-dip galvanised steel bend, with thread

Item number: 2046791

Dimensions

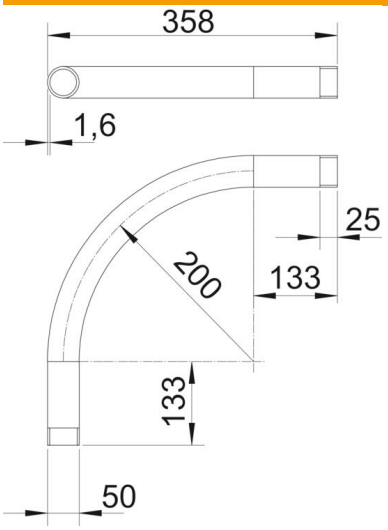

Dimension A	133 mm
Dimension B	358 mm
Dimension D	50 mm
Dimension l	25 mm
Dimension m (mm)	M50
Dimension R	200 mm
Dimension t	1.6 mm

Technical data

Version for	Thread
Flexible	no
For nominal pipe diameter	50 mm
Thread	M50x1,5
Halogen-free	no
With inspection opening and lid	no
With sleeve	yes
Brushed surface	no
Polished surface	no
ROHS-conformant	yes
Angle of the bend	90 °
Two-part	no