Technical data sheet

Hot-dip galvanised steel bend, with thread

Item number: 2046789

90° bend for electrical installation pipes according to EN 61386-1 with threaded ends to DIN EN 60423. With burr-free inner wall.
One connection sleeve is already screwed onto each pipe bend.

M E30 E90

St Steel

FT Hot-dip galvanised

Master data

Item number	2046789
Type	SBNM32 FT
Description 1	Conduit threaded bend
Description 2	with threaded coupler
Manufacturer	OBO
Dimension	M32x1,5
Material	Steel
Surface	Hot-dip galvanised
Surface standard	DIN EN ISO 1461
Smallest sales unit	20
Unit of quantity	Piece
Weight	56.6 kg
Weight unit	kg/100 pc.
CO2 Footprint (GWP) Cradle-to-Gate	1,7758 kg CO2e / 1 Piece

Technical data sheet

Hot-dip galvanised steel bend, with thread

Item number: 2046789

Dimensions

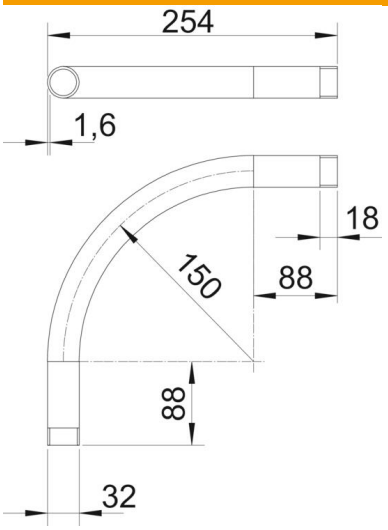

Dimension A	88 mm
Dimension B	254 mm
Dimension D	32 mm
Dimension l	18 mm
Dimension m (mm)	M32
Dimension R	150 mm
Dimension t	1.6 mm

Technical data

Version for	Thread
Flexible	no
For nominal pipe diameter	32 mm
Thread	M32x1,5
Halogen-free	no
With inspection opening and lid	no
With sleeve	yes
Brushed surface	no
Polished surface	no
ROHS-conformant	yes
Angle of the bend	90 °
Two-part	no