Technical data sheet

Cone cable gland, PG thread, strain relief, nickel-plated

Item number: 2046164

Cable gland with centrically acting transverse clip strain relief in the pressure screw, bend protection of movable cables through strongly rounded pressure screw.
With Pg connection thread to DIN 40430.
Pressure rings made of electrogalvanised and transparently passivated steel.
NR/SBR sealing ring.
Protection rating: with connection thread sealing ring IP 65, without connection thread sealing ring IP 54.
With hexagonal intermediate support (similar to shape C 4 to DIN 46320).
* Prices according to DEL notation.

CE UKCA IP 54 IP 65 Pg

CuZn 37 Brass

N Nickel-plated

Master data

Item number	2046164
Type	159 MS PG16
Description 1	Cable gland
Description 2	with outside hexagonal
Manufacturer	OBO
Dimension	PG16
Material	Brass
Surface Surface standard	Nickel-plated
Smallest sales unit	25
Unit of quantity	Piece
Weight	5.7 kg
Weight unit	kg/100 pc.
CO2 Footprint (GWP) Cradle-to-Gate	0,1495 kg CO2e / 1 Piece

Technical data sheet

Cone cable gland, PG thread, strain relief, nickel-plated

Item number: 2046164

Dimensions

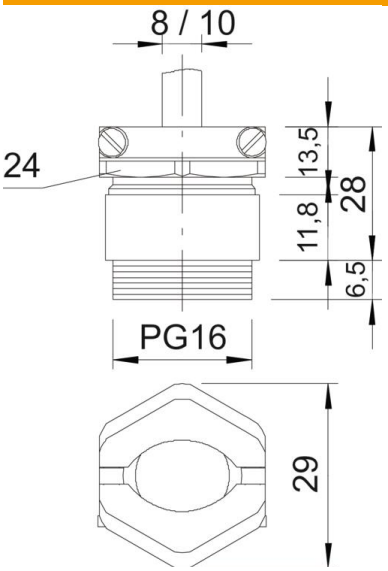

Dimension E	29 mm
Dimension L max.	28 mm
Dimension L1	6.5 mm
Dimension L2	13.5 mm
Dimension L3	11.8 mm

Technical data

Type of seal	Sealing ring
Bend protection	no
Sealing area D, max.	10 mm
Sealing area D, min.	8 mm
explosion-proof	no
Flat cable gland	no
For Ex zone	Without
Thread	Pg 16
Thread type	PG
Thread length	6.5 mm
Fibre-glass reinforced	no
Halogen-free	no
Sealing insert, multiple	no
With locknut	no
ROHS-conformant	Exempt
Impact-resistant	no
WAF	24
WAF 1	24 mm
WAF 2	26 mm
Protection rating	IP54
Strain relief option	yes