# Technical data sheet

## Cone cable gland, PG thread, light grey

## Item number: 2038444

Standard cable gland, shape A, to DIN 46320 with simple NR/SBR sealing ring
Pg connection thread to DIN 40430

Protection rating: With connection thread sealing ring IP65, without connection thread sealing ring IP54.
Impact-resistant

HALOGEN FREE CE IP 54 IP 65 Pg

PS Polystyrene

### Master data

| | |
|---|---|
| Item number | 2038444 |
| Type | 106+PG42 MG LGR |
| Description 1 | Cable gland |
| Description 2 | with locknut |
| Available from | 28.02.2019 |
| Manufacturer | OBO |
| Dimension | PG42 |
| Colour | Light grey; RAL 7035 |
| Material | Polystyrene |
| Smallest sales unit | 5 |
| Unit of quantity | Piece |
| Weight | 7.787 kg |
| Weight unit | kg/100 pc. |
| CO2 Footprint (GWP) Cradle-to-Gate | 0,3894 kg CO2e / 1 Piece |

# Technical data sheet

## Cone cable gland, PG thread, light grey

## Item number: 2038444

### Dimensions

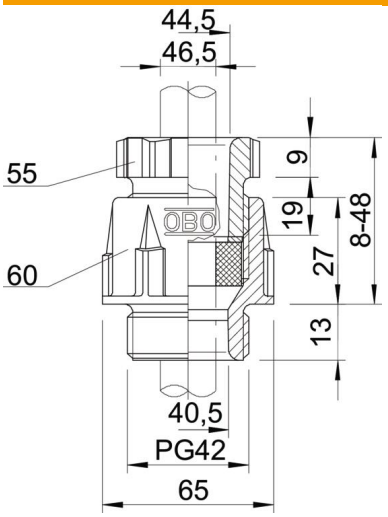


| | |
|---|---|
| Dimension D2 | 65 mm |
| Dimension D3 | 44.5 mm |
| Dimension D4 | 40.5 mm |
| Dimension E1 (mm) | 65 mm |
| Dimension E2 | 44.8 mm |
| Dimension E3 | 73 mm |
| Dimension L max. | 48 mm |
| Dimension L min. | 8 mm |
| Dimension L1 | 13 mm |
| Dimension L2 | 27 mm |
| Dimension L3 | 9 mm |
| Dimension L4 | 18.5 mm |

### Technical data

| | |
|---|---|
| Type of seal | Sealing ring |
| Version for | Straight |
| Bend protection | no |
| Sealing area D, max. | 38 mm |
| Sealing area D, min. | 30 mm |
| explosion-proof | no |
| For Ex zone | Without |
| For Ex zone gas | Without |
| For Ex zone dust | Without |
| Thread | Pg42 |
| Thread type | PG |
| Nominal thread size | 42 |
| Fibre-glass reinforced | no |
| Halogen-free | yes |
| Sealing insert, multiple | no |
| With locknut | no |
| ROHS-conformant | yes |
| Impact-resistant | no |
| WAF 1 | 60 mm |
| WAF 2 | 55 mm |
| WAF 3 | 65 mm |
| Protection rating | IP65 |
| Splittable gland | no |
| Permitted temperature range, max. | 65 °C |
| Permitted temperature range, min. | -20 °C |
| Strain relief option | no |