Technical data sheet

Cone cable gland, PG thread, light grey

Item number: 2038432

Standard cable gland, shape A, to DIN 46320 with simple NR/SBR sealing ring
Pg connection thread to DIN 40430

Protection rating: With connection thread sealing ring IP65, without connection thread sealing ring IP54.
Impact-resistant

HALOGEN FREE CE IP 54 IP 65 Pg

PS Polystyrene

Master data

Item number	2038432
Type	106+PG11 MG LGR
Description 1	Cable gland
Description 2	with locknut
Available from	28.02.2019
Manufacturer	OBO
Dimension	PG11
Colour	Light grey; RAL 7035
Material	Polystyrene
Smallest sales unit	50
Unit of quantity	Piece
Weight	0.804 kg
Weight unit	kg/100 pc.
CO2 Footprint (GWP) Cradle-to-Gate	0,0364 kg CO2e / 1 Piece

Technical data sheet

Cone cable gland, PG thread, light grey

Item number: 2038432

Dimensions

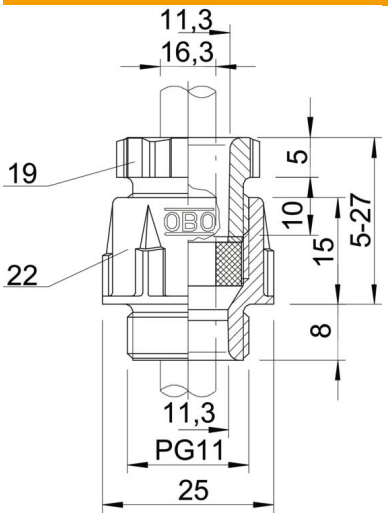

Dimension D2	25 mm
Dimension D3	11.3 mm
Dimension D4	11.3 mm
Dimension E1 (mm)	25 mm
Dimension E2	11.3 mm
Dimension E3	26 mm
Dimension L max.	27 mm
Dimension L min.	5 mm
Dimension L1	8 mm
Dimension L2	15 mm
Dimension L3	5 mm
Dimension L4	10 mm

Technical data

Type of seal	Sealing ring
Version for	Straight
Bend protection	no
Sealing area D, max.	10 mm
Sealing area D, min.	5.5 mm
explosion-proof	no
For Ex zone	Without
For Ex zone gas	Without
For Ex zone dust	Without
Thread	Pg 11
Thread type	PG
Nominal thread size	11
Fibre-glass reinforced	no
Halogen-free	yes
Sealing insert, multiple	no
With locknut	no
ROHS-conformant	yes
Impact-resistant	no
WAF 1	22 mm
WAF 2	19 mm
WAF 3	24 mm
Protection rating	IP65
Splittable gland	no
Permitted temperature range, max.	65 °C
Permitted temperature range, min.	-20 °C
Strain relief option	no