Technical data sheet

Intermediate expansion connector, metric thread

Item number: 2031452

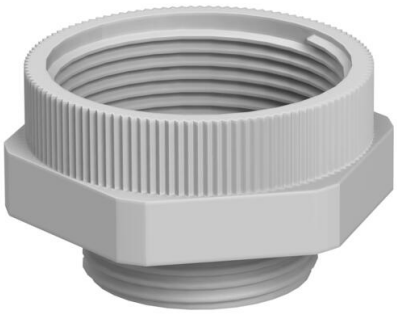

Extension with metric internal and external thread for mounting plastic cable glands on enclosures. Protection class IP54 without additional connecting seal. Protection class up to IP68 possible with additional connecting seal, e.g. O-ring or flat sealing ring.

HALOGEN FREE M

PA Polyamide

Master data

Item number	2031452
Type	107 E M 20-25 PA
Description 1	Extension
Description 2	M - M
Manufacturer	OBO
Dimension	M20-M25
Colour	Light grey; RAL 7035
Material	Polyamide
Smallest sales unit	50
Unit of quantity	Piece
Weight	0.63 kg
Weight unit	kg/100 pc.
CO2 Footprint (GWP) Cradle-to-Gate	0,0283 kg CO2e / 1 Piece

Technical data sheet

Intermediate expansion connector, metric thread

Item number: 2031452

Dimensions

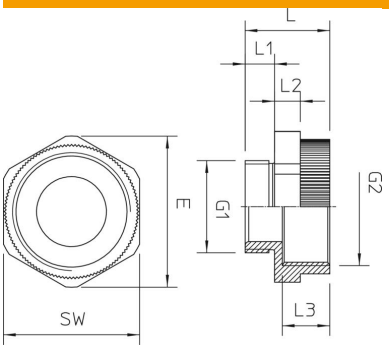

Dimension D	15 mm
Dimension E	33 mm
Dimension G1 (mm)	20
Dimension G2 (mm)	25
Dimension L	21 mm
Dimension L1	8 mm
Dimension L2	6 mm
Dimension L3	10.5 mm

Technical data

explosion-proof	no
Thread type: External thread	Metric
Thread type: Internal thread	Metric
Thread dimension, metric, external	20
Thread dimension, metric, internal	25
ROHS-conformant	yes
WAF	30
Nickel-plated	no