Technical data sheet

Separable cable gland M32, multiple sealing insert, light grey

Item number: 2024988

The splittable cable gland V-TEC TB.. ensures - like all V-TEC glands - a secure sealing of the cable. The installation of pre-terminated cables or function cables, for example, is easy and quick, thanks to the splitting of the cable gland.

The V-TEC TB is also unbeatable when refitting an existing installation and as a "repair gland". There is no need to disassemble pre-mounted cables, it can be installed without interrupting the production process.

The sealing inserts are used to insert multiple cables through a gland. Depending on the application, the specified hole diameters are reduced by 1–2 mm when tightening the cable gland.
The ideal aids are the spreading pliers which can be used to open the sealing insert. With this tool, inserting the individual cables is quick and easy.

The gland set consists of an intermediate support, a cap nut and the seal. Of course, the split locknut is also in the scope of delivery.
Further multiple sealing inserts upon request.

HALOGEN FREE | 650° | UV RESISTANT | CE | RoHS conform | UKCA | IP 67 | M | M32

PC Polycarbonate

Master data

Item number	2024988
Type	V-TEC TB32 3x11
Description 1	Cable gland, separable
Description 2	Sealing insert, multiple
Manufacturer	OBO
Dimension	M32
Colour	Light grey
Material	Polycarbonate
Smallest sales unit	5
Unit of quantity	Piece
Weight	7.196 kg
Weight unit	kg/100 pc.
CO2 Footprint (GWP) Cradle-to-Gate	0,3854 kg CO2e / 1 Piece

Technical data sheet

Separable cable gland M32, multiple sealing insert, light grey

Item number: 2024988

Dimensions

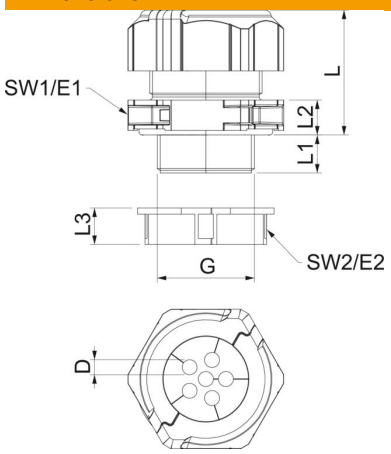

Length	46 mm
Width	51.5 mm
Height	53.5 mm
Dimension D	11 mm
Dimension E1 (mm)	51.5 mm
Dimension E2	45 mm
Dimension G	M32x1,5 mm
Dimension L	41 mm
Dimension L max.	41 mm
Dimension L min.	32 mm
Dimension L1	14 mm
Dimension L2	10 mm
Dimension L3	12 mm

Technical data

Number of drill holes	3
Type of seal	Sealing ring
Version for	Straight
Bend protection	no
explosion-proof	no
Flat cable gland	no
Flame-resistant	acc. to VDE 0471/DIN 695 Part 2-1, test temperature 650°C
For Ex zone	Without
For Ex zone gas	Without
For Ex zone dust	Without
Thread	M32 x 1,5
Thread type	Metric
Thread length	14 mm
Nominal thread size	32
Thread increase	1.5 mm
Fibre-glass reinforced	no
Halogen-free	yes
Unstable torque	8 Nm
Sealing insert, multiple	yes
With locknut	yes
ROHS-conformant	yes
Impact-resistant	yes
WAF 1	46 mm
WAF 2	40 mm
Protection rating	IP67
Hexagonal corner dimension	45 mm
Splittable gland	yes
Permitted temperature range, max.	80 °C
Permitted temperature range, min.	-20 °C
Strain relief option	yes