Technical data sheet

Divisible cable gland M25, seal insert, 1 cable, light grey

Item number: 2024925

The splittable cable gland V-TEC TB.. ensures - like all V-TEC glands - a secure sealing of the cable. The installation of pre-terminated cables or function cables, for example, is easy and quick, thanks to the splitting of the cable gland.

The V-TEC TB is also unbeatable when refitting an existing installation and as a "repair gland". There is no need to disassemble pre-mounted cables, it can be installed without interrupting the production process.

The various sealing inserts provide the option of sealing cables of different cable diameters according to the selected sealing insert. The ideal aiding tool is the pair of spreading pliers which can be used to open the sealing insert. With this tool, inserting the individual cables is quick and easy.

The gland set consists of an intermediate support, a cap nut and the seal. Of course, the split locknut is also in the scope of delivery.

HALOGEN FREE | 650° | UV RESISTANT | CE | RoHS conform | UKCA | IP 67 | M | M25

PC Polycarbonate

Master data

Item number	2024925
Type	V-TEC TB25 18-20
Description 1	Cable gland, separable
Description 2	Sealing insert, 1 cable
Manufacturer	OBO
Dimension	M25
Colour	Light grey
Material	Polycarbonate
Smallest sales unit	5
Unit of quantity	Piece
Weight	2.29 kg
Weight unit	kg/100 pc.
CO2 Footprint (GWP) Cradle-to-Gate	0,1058 kg CO2e / 1 Piece

Technical data sheet

Divisible cable gland M25, seal insert, 1 cable, light grey

Item number: 2024925

Dimensions

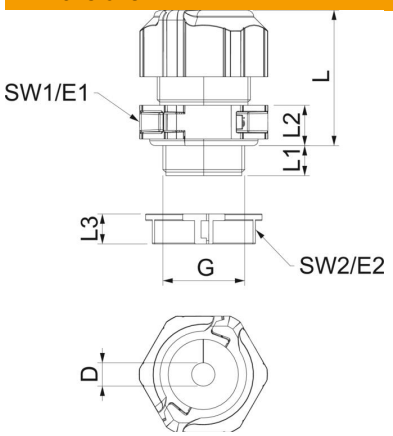

Length	35 mm
Width	38.5 mm
Height	50 mm
Dimension D	20 mm
Dimension E1 (mm)	38.5 mm
Dimension E2	33.8 mm
Dimension G	M25x1,5 mm
Dimension L	41 mm
Dimension L max.	40 mm
Dimension L min.	31.5 mm
Dimension L1	11 mm
Dimension L2	10 mm
Dimension L3	9 mm

Technical data

Number of drill holes	1
Type of seal	Sealing ring
Version for	Straight
Bend protection	no
Sealing area D, max.	20 mm
Sealing area D, min.	18 mm
explosion-proof	no
Flat cable gland	no
Flame-resistant	acc. to VDE 0471/DIN 695 Part 2-1, test temperature 650°C
For Ex zone	Without
For Ex zone gas	Without
For Ex zone dust	Without
Thread	M25 x 1,5
Thread type	Metric
Thread length	11 mm
Nominal thread size	25
Thread increase	1.5 mm
Fibre-glass reinforced	no
Halogen-free	yes
Unstable torque	4 Nm
Sealing insert, multiple	no
With locknut	yes
ROHS-conformant	yes
Impact-resistant	yes
WAF 1	35 mm
WAF 2	31 mm
Protection rating	IP67
Splittable gland	yes
Permitted temperature range, max.	80 °C
Permitted temperature range, min.	-20 °C
Strain relief option	yes