# Technical data sheet

## Divisible cable gland M25, seal insert, 1 cable, light grey

## Item number: 2024916

The splittable cable gland V-TEC TB.. ensures - like all V-TEC glands - a secure sealing of the cable. The installation of pre-terminated cables or function cables, for example, is easy and quick, thanks to the splitting of the cable gland.

The V-TEC TB is also unbeatable when refitting an existing installation and as a "repair gland". There is no need to disassemble pre-mounted cables, it can be installed without interrupting the production process.

The various sealing inserts provide the option of sealing cables of different cable diameters according to the selected sealing insert. The ideal aiding tool is the pair of spreading pliers which can be used to open the sealing insert. With this tool, inserting the individual cables is quick and easy.

The gland set consists of an intermediate support, a cap nut and the seal. Of course, the split locknut is also in the scope of delivery.

HALOGEN FREE | 650° | UV RESISTANT | CE | RoHS conform | UKCA | IP 67 | M | M25

PC Polycarbonate

### Master data

| | |
|---|---|
| Item number | 2024916 |
| Type | V-TEC TB25 11-13 |
| Description 1 | Cable gland, separable |
| Description 2 | Sealing insert, 1 cable |
| Manufacturer | OBO |
| Dimension | M25 |
| Colour | Light grey |
| Material | Polycarbonate |
| Smallest sales unit | 5 |
| Unit of quantity | Piece |
| Weight | 3.11 kg |
| Weight unit | kg/100 pc. |
| CO2 Footprint (GWP) Cradle-to-Gate | 0,1224 kg CO2e / 1 Piece |

# Technical data sheet

## Divisible cable gland M25, seal insert, 1 cable, light grey

## Item number: 2024916

### Dimensions

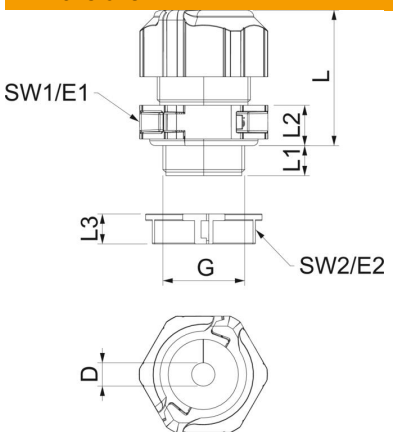


| | |
|---|---|
| Length | 35 mm |
| Width | 38.5 mm |
| Height | 50 mm |
| Dimension D | 13 mm |
| Dimension E1 (mm) | 38.5 mm |
| Dimension E2 | 33.8 mm |
| Dimension G | M25x1,5 mm |
| Dimension L | 41 mm |
| Dimension L max. | 40 mm |
| Dimension L min. | 31.5 mm |
| Dimension L1 | 11 mm |
| Dimension L2 | 10 mm |
| Dimension L3 | 9 mm |

### Technical data

| | |
|---|---|
| Number of drill holes | 1 |
| Type of seal | Sealing ring |
| Version for | Straight |
| Bend protection | no |
| Sealing area D, max. | 13 mm |
| Sealing area D, min. | 11 mm |
| explosion-proof | no |
| Flat cable gland | no |
| Flame-resistant | acc. to VDE 0471/DIN 695 Part 2-1, test temperature 650°C |
| For Ex zone | Without |
| For Ex zone gas | Without |
| For Ex zone dust | Without |
| Thread | M25 x 1,5 |
| Thread type | Metric |
| Thread length | 11 mm |
| Nominal thread size | 25 |
| Thread increase | 1.5 mm |
| Fibre-glass reinforced | no |
| Halogen-free | yes |
| Unstable torque | 4 Nm |
| Sealing insert, multiple | no |
| With locknut | yes |
| ROHS-conformant | yes |
| Impact-resistant | yes |
| WAF 1 | 35 mm |
| WAF 2 | 31 mm |
| Protection rating | IP67 |
| Splittable gland | yes |
| Permitted temperature range, max. | 80 °C |
| Permitted temperature range, min. | -20 °C |
| Strain relief option | yes |