Technical data sheet

Cable gland, PG thread, set with locknut, light grey

Item number: 2024659

Cable gland with PG connection thread in cap nut design, suitable for junction boxes, housings, distributor boxes in private and industrial areas. With strain relief and integrated sealing lip, tested according to DIN EN 62444. Protection class IP68. Can be used between –20°C and +65°C. Including locknut.
Table column D1: sealing range to VDE 0619, in which no strain relief is required.
Table column D2: Sealing range including strain relief and twist protection to VDE 0619

750° UV RESISTANT IP 68 Pg

PA Polyamide

Master data

Item number	2024659
Type	V-TEC PG11+ LGR
Description 1	Cable gland
Description 2	with locknut
Manufacturer	OBO
Dimension	PG11
Colour	Light grey; RAL 7035
Material	Polyamide
Smallest sales unit	50
Unit of quantity	Piece
Weight	1.074 kg
Weight unit	kg/100 pc.
CO2 Footprint (GWP) Cradle-to-Gate	0,0509 kg CO2e / 1 Piece

Technical data sheet

Cable gland, PG thread, set with locknut, light grey

Item number: 2024659

Dimensions

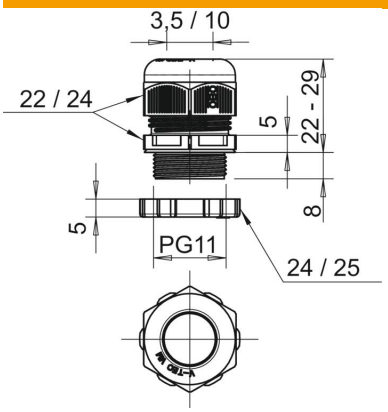

Dimension E1 (mm)	25 mm
Dimension E2	24 mm
Dimension L max.	29 mm
Dimension L min.	22 mm
Dimension L1	8 mm
Dimension L2	5 mm
Dimension L3	5 mm

Technical data

Type of seal	Sealing ring
Version for	Straight
Bend protection	no
Sealing area D, max.	10 mm
Sealing area D, min.	3.5 mm
explosion-proof	no
Flat cable gland	no
For Ex zone	Without
For Ex zone gas	Without
For Ex zone dust	Without
Thread	Pg 11
Thread type	PG
Thread length	8 mm
Nominal thread size	11
Thread increase	1.5 mm
Fibre-glass reinforced	no
Halogen-free	yes
Sealing insert, multiple	no
With locknut	yes
ROHS-conformant	yes
Impact-resistant	no
WAF 1	22 mm
WAF 2	24 mm
Protection rating	IP68
Hexagonal corner dimension	25 mm
Splittable gland	no
Permitted temperature range, max.	65 °C
Permitted temperature range, min.	-20 °C
Strain relief and wringing protection D2, max.	10 mm
Strain relief and wringing protection D2, min.	4.5 mm
Strain relief option	yes