# Technical data sheet

## Cable gland, long PG thread, light grey

## Item number: 2024365

Cable gland with PG connection thread in cap nut design, suitable for junction boxes, housings, distributor boxes in private and industrial areas. With strain relief and integrated sealing lip, tested according to DIN EN 62444. Protection class IP68. Can be used between –20°C and +65°C.

PA Polyamide

### Master data

| | |
|---|---|
| Item number | 2024365 |
| Type | V-TEC L PG42 LGR |
| Description 1 | Cable gland |
| Description 2 | with long connection thread |
| Manufacturer | OBO |
| Dimension | PG42 |
| Colour | Light grey; RAL 7035 |
| Material | Polyamide |
| Smallest sales unit | 5 |
| Unit of quantity | Piece |
| Weight | 10.07 kg |
| Weight unit | kg/100 pc. |
| CO2 Footprint (GWP) Cradle-to-Gate | 0,4733 kg CO2e / 1 Piece |

# Technical data sheet

## Cable gland, long PG thread, light grey

## Item number: 2024365

### Dimensions

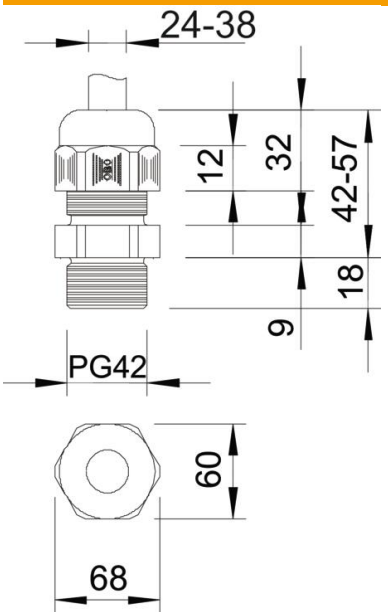


| | |
|---|---|
| Dimension E | 68 mm |
| Dimension L max. | 57 mm |
| Dimension L min. | 42 mm |
| Dimension L1 | 18 mm |
| Dimension L2 | 9 mm |
| Dimension L3 | 32.5 mm |

### Technical data

| | |
|---|---|
| Type of seal | Sealing ring |
| Version for | Straight |
| Bend protection | no |
| Sealing area D, max. | 38 mm |
| Sealing area D, min. | 24 mm |
| explosion-proof | no |
| Flat cable gland | no |
| For Ex zone | Without |
| For Ex zone gas | Without |
| For Ex zone dust | Without |
| Thread | Pg 42 |
| Thread type | PG |
| Thread length | 18 mm |
| Nominal thread size | 42 |
| Thread increase | 1.5 mm |
| Fibre-glass reinforced | no |
| Halogen-free | yes |
| Unstable torque | 5 Nm |
| Sealing insert, multiple | no |
| With locknut | no |
| ROHS-conformant | yes |
| Impact-resistant | no |
| WAF | 60 |
| Protection rating | IP68 |
| Splittable gland | no |
| Permitted temperature range, max. | 65 °C |

### Technical data

| | |
|---|---|
| Permitted temperature range, min. | -20 °C |
| Strain relief and wringing protection D2, max. | 38 mm |
| Strain relief and wringing protection D2, min. | 26 mm |
| Strain relief option | yes |