Technical data sheet

Cable gland, metric thread, with screw plug, light grey

Item number: 2023048

Cable gland with metric connection thread in cap nut design, suitable for junction boxes, housings, distributor cabinets in private and industrial areas. With strain relief and integrated sealing lip, tested according to DIN EN 62444. Protection class IP68. Can be used between –20°C and +65°C.
This makes it easy to close unnecessary openings. No dust or water is able to enter, so the protection rating remains intact.
Ideal if all available openings are to be fitted with cable glands right at the time of installation. This considerably reduces the workload during retroinstallation.

650° UV RESISTANT IP 68 M

PA Polyamide

Master data

Item number	2023048
Type	V-TEC VM32VS LGR
Description 1	Cable gland
Description 2	pre-assembled seal plug
Manufacturer	OBO
Dimension	M32
Colour	Light grey; RAL 7035
Material	Polyamide
Smallest sales unit	20
Unit of quantity	Piece
Weight	2.48 kg
Weight unit	kg/100 pc.
CO2 Footprint (GWP) Cradle-to-Gate	0,1217 kg CO2e / 1 Piece

Technical data sheet

Cable gland, metric thread, with screw plug, light grey

Item number: 2023048

Dimensions

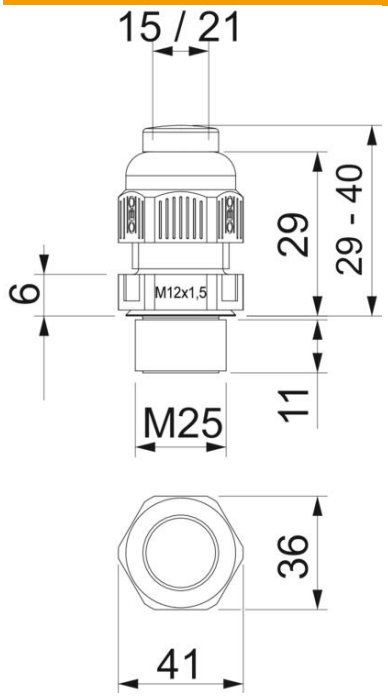

Length	29 mm
Width	36 mm
Height	41 mm
Dimension E	41 mm
Dimension L max.	40 mm
Dimension L min.	29 mm
Dimension L1	11 mm
Dimension L2	6 mm
Dimension L3	29 mm

Technical data

Type of seal	Sealing ring
Version for	Straight
Bend protection	no
Sealing area D, max.	21 mm
Sealing area D, min.	15 mm
explosion-proof	no
Flat cable gland	no
Flame-resistant	acc. to VDE 0471/DIN 695 Part 2-1, test temperature 650°C
For Ex zone	Without
For Ex zone gas	Without
For Ex zone dust	Without
Thread	M32 x 1,5
Thread type	Metric
Thread length	11 mm
Nominal thread size	32
Thread increase	1.5 mm
Fibre-glass reinforced	no
Halogen-free	yes
Unstable torque	7.5 Nm
Sealing insert, multiple	no
With locknut	no
ROHS-conformant	yes
Impact-resistant	no
WAF	36

Technical data sheet

Cable gland, metric thread, with screw plug, light grey

Item number: 2023048

Technical data

WAF 1	36 mm
Protection rating	IP68
Hexagonal corner dimension	41 mm
Splittable gland	no
Permitted temperature range, max.	65 °C
Permitted temperature range, min.	-20 °C
Strain relief option	yes