Technical data sheet

Cable gland, metric thread, with screw plug, light grey

Item number: 2023046

Cable gland with metric connection thread in cap nut design, suitable for junction boxes, housings, distributor cabinets in private and industrial areas. With strain relief and integrated sealing lip, tested according to DIN EN 62444. Protection class IP68. Can be used between –20°C and +65°C.
This makes it easy to close unnecessary openings. No dust or water is able to enter, so the protection rating remains intact.
Ideal if all available openings are to be fitted with cable glands right at the time of installation. This considerably reduces the workload during retroinstallation.

650° UV RESISTANT IP 68 M

PA Polyamide

Master data

Item number	2023046
Type	V-TEC VM25VS LGR
Description 1	Cable gland
Description 2	pre-assembled seal plug
Manufacturer	OBO
Dimension	M25
Colour	Light grey; RAL 7035
Material	Polyamide
Smallest sales unit	25
Unit of quantity	Piece
Weight	1.55 kg
Weight unit	kg/100 pc.
CO2 Footprint (GWP) Cradle-to-Gate	0,0728 kg CO2e / 1 Piece

Technical data sheet

Cable gland, metric thread, with screw plug, light grey

Item number: 2023046

Dimensions

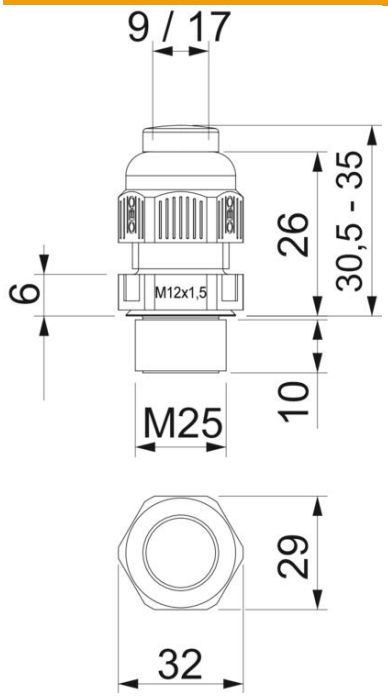

Length	30.5 mm
Width	29 mm
Height	32 mm
Dimension E	32 mm
Dimension L max.	35 mm
Dimension L min.	30.5 mm
Dimension L1	10 mm
Dimension L2	6 mm
Dimension L3	26 mm

Technical data

Type of seal	Sealing ring
Version for	Straight
Bend protection	no
Sealing area D, max.	17 mm
Sealing area D, min.	9 mm
explosion-proof	no
Flat cable gland	no
Flame-resistant	acc. to VDE 0471/DIN 695 Part 2-1, test temperature 650°C
For Ex zone	Without
For Ex zone gas	Without
For Ex zone dust	Without
Thread	M25 x 1,5
Thread type	Metric
Thread length	10 mm
Nominal thread size	25
Thread increase	1.5 mm
Fibre-glass reinforced	no
Halogen-free	yes
Sealing insert, multiple	no
With locknut	no
ROHS-conformant	yes
Impact-resistant	no
WAF	29
WAF 1	29 mm

Technical data sheet

Cable gland, metric thread, with screw plug, light grey

Item number: 2023046

Technical data

Protection rating	IP68
Hexagonal corner dimension	32 mm
Splittable gland	no
Permitted temperature range, max.	65 °C
Permitted temperature range, min.	-20 °C
Strain relief option	yes