Technical data sheet

Cable gland, metric thread, extra long, black

Item number: 2022993

Cable gland with metric connection thread in cap nut design, suitable for junction boxes, housings, distributor cabinets in private and industrial areas. With strain relief and integrated sealing lip, tested according to DIN EN 62444. Protection class IP68. Can be used between –20°C and +65°C.

650° UV RESISTANT IP 68 M

PA Polyamide

Master data

Item number	2022993
Type	V-TEC VM LL40 SW
Description 1	Cable gland
Description 2	fully metric long 24mm
Manufacturer	OBO
Dimension	M40
Colour	Black
Material	Polyamide
Smallest sales unit	10
Unit of quantity	Piece
Weight	2.2 kg
Weight unit	kg/100 pc.
CO2 Footprint (GWP) Cradle-to-Gate	0,1941 kg CO2e / 1 Piece

Technical data sheet

Cable gland, metric thread, extra long, black

Item number: 2022993

Dimensions

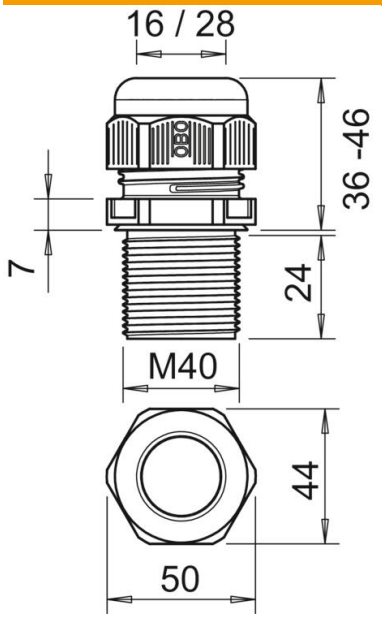

Dimension E	50 mm
Dimension L max.	46 mm
Dimension L min.	36 mm
Dimension L1	24 mm
Dimension L2	7 mm

Technical data

Type of seal	Sealing ring
Version for	Straight
Bend protection	no
Sealing area D, max.	28 mm
Sealing area D, min.	16 mm
explosion-proof	no
Flat cable gland	no
Flame-resistant	acc. to VDE 0471/DIN 695 Part 2-1, test temperature 650°C
For Ex zone	Without
For Ex zone gas	Without
For Ex zone dust	Without
Thread	M40 x 1,5
Thread type	Metric
Thread length	24 mm
Nominal thread size	40
Thread increase	1.5 mm
Fibre-glass reinforced	no
Halogen-free	yes
Unstable torque	10 Nm
Impact category	4
Strain relief category	A
Sealing insert, multiple	no
With locknut	no
ROHS-conformant	yes
Impact-resistant	no
WAF	44
Protection rating	IP68

Technical data sheet

Cable gland, metric thread, extra long, black

Item number: 2022993

Technical data

Hexagonal corner dimension	50 mm
Splittable gland	no
Permitted temperature range, max.	65 °C
Permitted temperature range, min.	-20 °C
Strain relief option	yes