Technical data sheet

Cable gland, long metric thread, silver grey

Item number: 2022921

Cable gland with metric connection thread in cap nut design, suitable for junction boxes, housings, distributor cabinets in private and industrial areas. With strain relief and integrated sealing lip, tested according to DIN EN 62444. Protection class IP68. Can be used between –20°C and +65°C.

650° UV RESISTANT IP 68 M

PA Polyamide

Master data

Item number	2022921
Type	V-TEC VM L12 SGR
Description 1	Cable gland
Description 2	fully metric long
Manufacturer	OBO
Dimension	M12
Colour	Silver grey; RAL 7001
Material	Polyamide
Smallest sales unit	50
Unit of quantity	Piece
Weight	0.392 kg
Weight unit	kg/100 pc.
CO2 Footprint (GWP) Cradle-to-Gate	0,0256 kg CO2e / 1 Piece

Technical data sheet

Cable gland, long metric thread, silver grey

Item number: 2022921

Dimensions

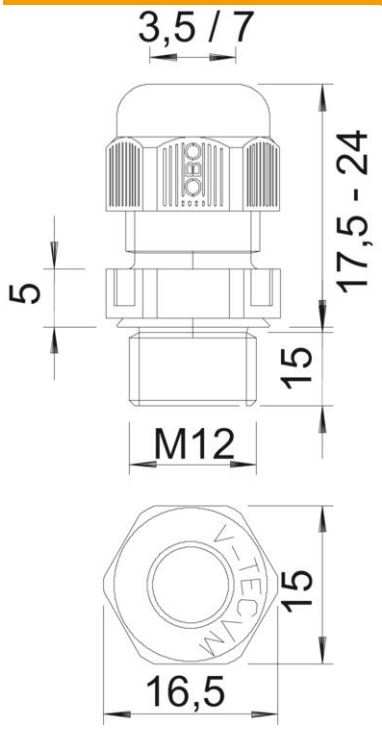

Dimension E	16.5 mm
Dimension L max.	24 mm
Dimension L min.	17.5 mm
Dimension L1	15 mm
Dimension L2	5 mm

Technical data

Type of seal	Sealing ring
Version for	Straight
Bend protection	no
Sealing area D, max.	7 mm
Sealing area D, min.	3.5 mm
explosion-proof	no
Flat cable gland	no
Flame-resistant	acc. to VDE 0471/DIN 695 Part 2-1, test temperature 650°C
For Ex zone	Without
For Ex zone gas	Without
For Ex zone dust	Without
Thread	M12 x 1,5
Thread type	Metric
Thread length	15 mm
Nominal thread size	12
Thread increase	1.5 mm
Fibre-glass reinforced	no
Halogen-free	yes
Unstable torque	2 Nm
Impact category	3
Strain relief category	A
Sealing insert, multiple	no

Technical data sheet

Cable gland, long metric thread, silver grey

Item number: 2022921

Technical data

With locknut	no
ROHS-conformant	yes
Impact-resistant	no
WAF	15
Protection rating	IP68
Hexagonal corner dimension	16.5 mm
Splittable gland	no
Permitted temperature range, max.	65 °C
Permitted temperature range, min.	-20 °C
Strain relief option	yes