Technical data sheet

Cap nut cable gland, metric thread, silver grey

Item number: 2022857

The quickest and most convenient way of providing strain relief and tightness with cable glands on junction boxes and housings is with the tried-and-trusted V-TEC VM cable glands from OBO. With the integrated sealing lip and the special OBO lamella technology, protection class IP68 is achieved. Strain relief and tightness have been tested to DIN EN 62444.
The connecting threads of the cable glands are metric or PG and are therefore suitable for universal use. Once screwed in place, the installation is there forever, as the optimum thread adjustment with the right pitch ensures permanent resistance to shaking.
Applications: From private housing with junction boxes up to industrial applications in the distributor cabinet.
Temperature range: –20 °C to +65 °C.

650° UV RESISTANT IP 68 M

PA Polyamide

Master data

Item number	2022857
Type	V-TEC VM63 SGR
Description 1	Cable gland
Description 2	fully metric
Manufacturer	OBO
Dimension	M63
Colour	Silver grey; RAL 7001
Material	Polyamide
Smallest sales unit	5
Unit of quantity	Piece
Weight	8.306 kg
Weight unit	kg/100 pc.
CO2 Footprint (GWP) Cradle-to-Gate	0,4135 kg CO2e / 1 Piece

Technical data sheet

Cap nut cable gland, metric thread, silver grey

Item number: 2022857

Dimensions

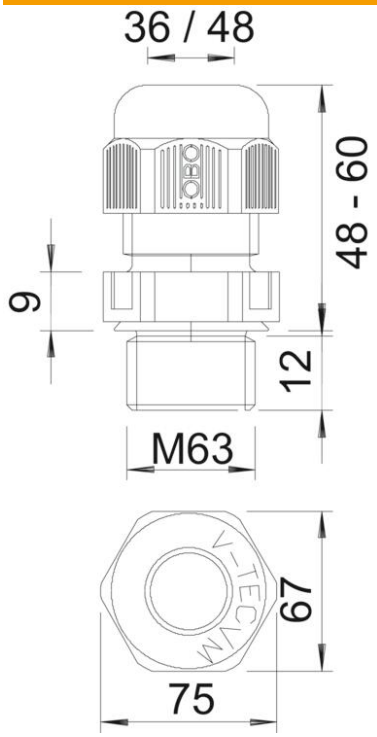

Dimension E	75 mm
Dimension L max.	60 mm
Dimension L min.	48 mm
Dimension L1	12 mm
Dimension L2	9 mm

Technical data

Type of seal	Sealing ring
Version for	Straight
Bend protection	no
Sealing area D, max.	48 mm
Sealing area D, min.	36 mm
explosion-proof	no
Flat cable gland	no
Flame-resistant	acc. to VDE 0471/DIN 695 Part 2-1, test temperature 650°C
For Ex zone	Without
For Ex zone gas	Without
For Ex zone dust	Without
Thread	M63 x 1,5
Thread type	Metric
Thread length	12 mm
Nominal thread size	63
Thread increase	1.5 mm
Fibre-glass reinforced	no
Halogen-free	yes
Unstable torque	15 Nm
Impact category	4
Strain relief category	A
Sealing insert, multiple	no

Technical data sheet

Cap nut cable gland, metric thread, silver grey

Item number: 2022857

Technical data

With locknut	no
ROHS-conformant	yes
Impact-resistant	no
WAF	67
Protection rating	IP68
Hexagonal corner dimension	75 mm
Splittable gland	no
Permitted temperature range, max.	65 °C
Permitted temperature range, min.	-20 °C
Strain relief option	yes