Technical data sheet

Cable gland, metric thread with multi-way seal insert, light grey

Item number: 2022138

Cable gland with metric connection thread in cap nut design, suitable for junction boxes, housings, distributor cabinets in private and industrial areas. With strain relief and integrated sealing lip, tested according to DIN EN 62444. Protection class IP68. Can be used between –20°C and +65°C.

HALOGEN FREE | UV RESISTANT | IP 68 | M

PA Polyamide

Master data

Item number	2022138
Type	V-TEC VM32 4x8
Description 1	Cable gland
Description 2	with multi-way seal insert
Manufacturer	OBO
Dimension	M32
Colour	Light grey
Material	Polyamide
Smallest sales unit	20
Unit of quantity	Piece
Weight	2.24 kg
Weight unit	kg/100 pc.
CO2 Footprint (GWP) Cradle-to-Gate	0,1048 kg CO2e / 1 Piece

Technical data sheet

Cable gland, metric thread with multi-way seal insert, light grey

Item number: 2022138

Dimensions

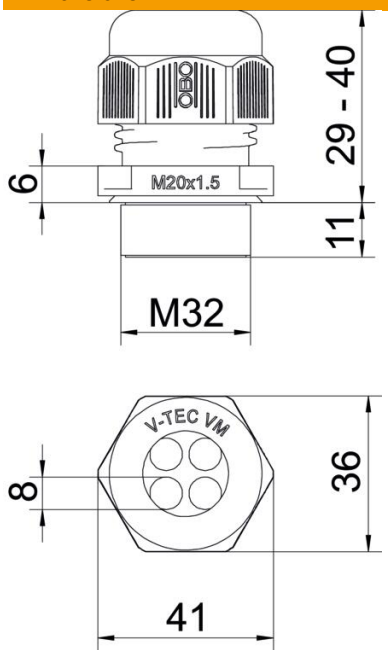

Dimension D	8 mm
Dimension E	41 mm
Dimension L max.	40 mm
Dimension L min.	29 mm
Dimension L1	11 mm
Dimension L2	6 mm

Technical data

Number of drill holes	4
Type of seal	Sealing ring
Version for	Straight
Bend protection	no
explosion-proof	no
Flat cable gland	no
Flame-resistant	acc. to VDE 0471/DIN 695 Part 2-1, test temperature 650°C
For Ex zone	Without
For Ex zone gas	Without
For Ex zone dust	Without
Thread	M32 x 1,5
Thread type	Metric
Thread length	11 mm
Nominal thread size	32
Thread increase	1.5 mm
Fibre-glass reinforced	no
Halogen-free	yes
Unstable torque	7.5 Nm
Sealing insert, multiple	yes
With locknut	no
ROHS-conformant	yes
Impact-resistant	no
WAF	36
Protection rating	IP68
Hexagonal corner dimension	41 mm

Technical data sheet

Cable gland, metric thread with multi-way seal insert, light grey

Item number: 2022138

Technical data

Splittable gland	no
Permitted temperature range, max.	65 °C
Permitted temperature range, min.	-20 °C
Strain relief option	yes