Technical data sheet

Cable gland, metric thread with multi-way seal insert, light grey

Item number: 2022128

Cable gland with metric connection thread in cap nut design, suitable for junction boxes, housings, distributor cabinets in private and industrial areas. With strain relief and integrated sealing lip, tested according to DIN EN 62444. Protection class IP68. Can be used between –20°C and +65°C.

HALOGEN FREE UV RESISTANT IP 68 M

PA Polyamide

Master data

Item number	2022128
Type	V-TEC VM25 2x8
Description 1	Cable gland
Description 2	with multi-way seal insert
Manufacturer	OBO
Dimension	M25
Colour	Light grey
Material	Polyamide
Smallest sales unit	25
Unit of quantity	Piece
Weight	1.36 kg
Weight unit	kg/100 pc.
CO2 Footprint (GWP) Cradle-to-Gate	0,0693 kg CO2e / 1 Piece

Technical data sheet

Cable gland, metric thread with multi-way seal insert, light grey

Item number: 2022128

Dimensions

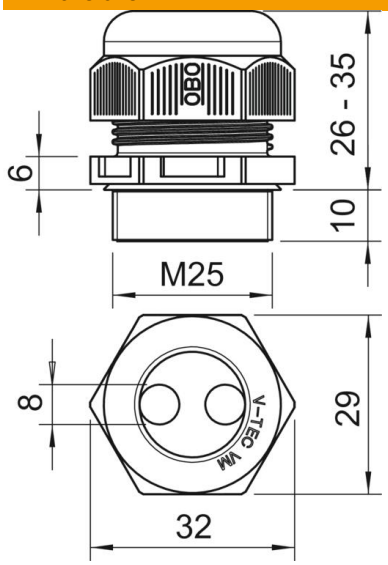

Dimension D	8 mm
Dimension E	32 mm
Dimension L max.	35 mm
Dimension L min.	26 mm
Dimension L1	10 mm
Dimension L2	6 mm

Technical data

Number of drill holes	2
Type of seal	Sealing ring
Version for	Straight
Bend protection	no
explosion-proof	no
Flat cable gland	no
Flame-resistant	acc. to VDE 0471/DIN 695 Part 2-1, test temperature 650°C
For Ex zone	Without
For Ex zone gas	Without
For Ex zone dust	Without
Thread	M25 x 1,5
Thread type	Metric
Thread length	10 mm
Nominal thread size	25
Thread increase	1.5 mm
Fibre-glass reinforced	no
Halogen-free	yes
Unstable torque	5 Nm
Sealing insert, multiple	yes
With locknut	no
ROHS-conformant	yes
Impact-resistant	no
WAF	29
Protection rating	IP68
Hexagonal corner dimension	32 mm
Splittable gland	no
Permitted temperature range, max.	65 °C

Technical data

Permitted temperature range, min.	-20 °C
Strain relief option	yes