Technical data sheet

Main branch terminal, 1-pole

Item number: 2009046

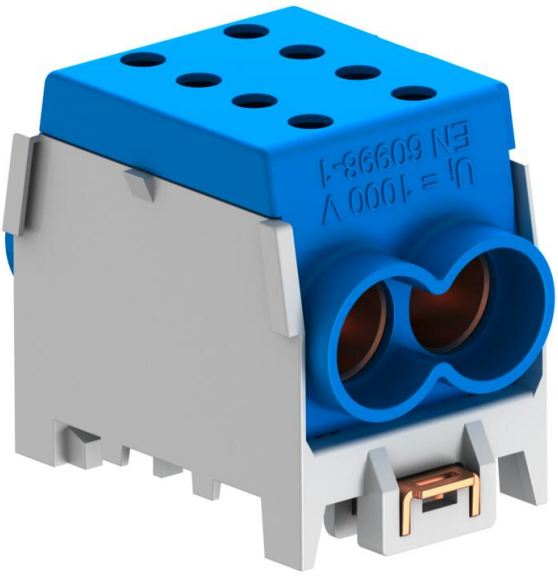

1-pin main terminal block, 4 x 70 mm² conductor connection cross-sections per pin. With 2 screws per terminal for secure contact pressure. High-resistance quick-action fastening made of galvanised sheet steel for simple mounting on support rails.

Terminal covers are available in the standard conductor colours.

Master data

Item number	2009046
Type	HLAK 1-2x70 GRBL
Description 1	Main line branch terminal
Manufacturer	OBO
Dimension	70/70mm²
Colour	grey / blue
Smallest sales unit	1
Unit of quantity	Piece
Weight	11.6 kg
Weight unit	kg/100 pc.
CO2 Footprint (GWP) Cradle-to-Gate	0,037 kg CO2e / 1 Piece

Technical data sheet

Main branch terminal, 1-pole

Item number: 2009046

Dimensions

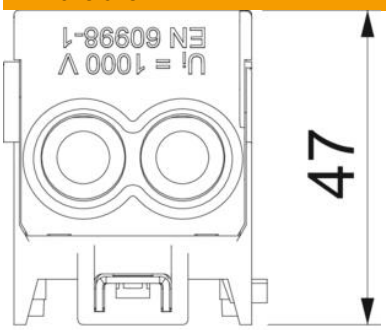

Width	55 mm
Height	40 mm

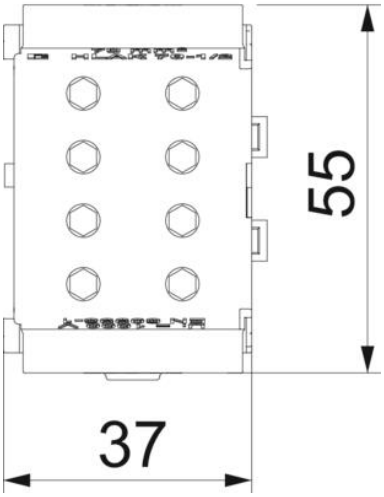

Technical data sheet

Main branch terminal, 1-pole

Item number: 2009046

Technical data

Connectable conductor cross-section, single-wire, max.	70 mm²
Connectable conductor cross-section, single-wire, min.	4 mm²
Connectable conductor cross-section, fine-wire with wire-end ferrule, max.	50 mm²
Connectable conductor cross-section, fine-wire with wire-end ferrule, min.	4 mm²
Connectable conductor cross-section, multi-wire, max.	70 mm²
Connectable conductor cross-section, multi-wire, min.	4 mm²
Connection type	Bolts
Connection position	Top/bottom
Connection cross-section, multi-wire, max.	70 mm²
Connection cross-section, multi-wire, min.	4 mm²
No. of terminals	4
Number of screwless terminals per pole	4
Flame-resistant	Acc. to VDE 0471/DIN 695 Part 2-1, test temperature 960 °C
Suitable for ribbon conductor connection	no
Suitable for flexible conductors	no
Suitable for solid conductors	yes
Suitable for multi-wire conductors	yes
Suitable for round cable connection	yes
Suitable for sector conductor connection	yes
Halogen-free	yes
Insulation material	Thermoplast
Max. Measuring operating current Ie	190 A
Max. Cable cross-section	70 mm²
Max. Conductor cross-section	70 mm²
With actuating levers	no
Nominal cross-section, min.	70 mm²
Nominal voltage	960 V
Nominal current	190 A
Pole number	1
ROHS-conformant	yes
Impact-resistant	yes
Permitted temperature range, max.	70 °C
Permitted temperature range, min.	-25 °C
Transparent	no
Ambient temperature	40 °C
VDE-tested	yes