Technical data sheet

Junction box T60, with knock-out entries

Item number: 2007927

Junction box for the connection of cables and lines indoors and in protected outdoor areas. Square design with knock-out entries to the sides and knock-out entries in the bottom. Suitable for wall and ceiling mounting and on mounting panels. With the option to fasten inside and to mount via the corner domes. With fixed clamping cover. Made from halogen-free and UV-resistant materials.

Junction box according to DIN EN 60670. Flame-resistant to DIN EN 60695/2/11, test temperature 650 °C. Impact resistance IK07 according to DIN EN 50102.

Clear internal dimensions: 100x100x48 mm

HALOGEN FREE | 650° | 500 V | IP 67 | 6 mm² | 7 | M25 | IK 07

PP Polypropylene

Master data

Item number	2007927
Type	T 60 M25 RO-LGR
Description 1	Junction box
Description 2	M25 entry, red cover
Manufacturer	OBO
Dimension	114x114x57
Colour	Grey / red
Material	Polypropylene
Smallest sales unit	5
Unit of quantity	Piece
Weight	12.3 kg
Weight unit	kg/100 pc.
CO2 Footprint (GWP) Cradle-to-Gate	0,4555 kg CO2e / 1 Piece

Technical data sheet

Junction box T60, with knock-out entries

Item number: 2007927

Dimensions

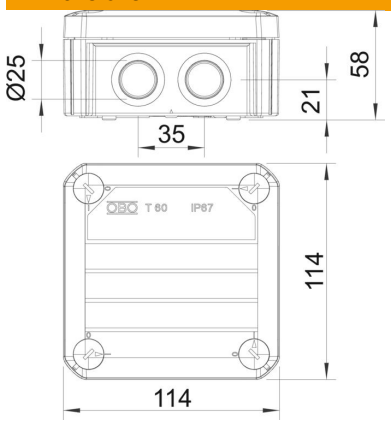

Length	114 mm
Width	114 mm
Height	57 mm

Technical data

Expandable	yes
No. of entries	7
Type of entry	Plug-in seal
Type of entry	Gland
Type of housing penetration	Pre-marking
Measured insulation voltage Vi	500 V
Equipment	Without
Cover	Not transparent
Cover fastening	Screwed
Entry from rear	yes
Entries	7 x Ø25
Explosion-tested version	no
Flame-resistant	acc. to VDE 0471/DIN 695 Part 2-1, test temperature 650°C
Shape	Square
Maintain electrical functions	Without
For Ex zone	Without
For Ex zone gas	Without
For Ex zone dust	Without
Fibre-glass reinforced	no
Halogen-free	yes
Clear internal dimensions	100x100x48 mm
With screening	no
with lid	yes
Mounting type	Wall/ceiling mounting
Nominal cross-section, min.	6 mm²
Nominal voltage	500 V
Sealable	yes
ROHS-conformant	yes
Protection rating	IP67
Protection rating IK code	IK07.
Permitted temperature range, max.	60 °C
Permitted temperature range, min.	-5 °C
Transparent lid	no

Technical data	
Weatherproof	no