Technical data sheet

Junction box T 100, with Wieland connector and socket 1S3+2B3

Item number: 2007876

Junction box with Wieland connector 1S4+3B3 for the connection of cables and lines indoors and in protected outdoor areas. Rectangular design with knock-out entries to the sides and knock-out entries in the bottom. Suitable for wall and ceiling mounting and on mounting panels. With the option of fastening inside and to mount via the corner domes. Cover with quick lock, sealable. Made from halogen-free and UV-resistant materials.

Junction box according to DIN EN 60670. Flame-resistant to DIN EN 60695/2/11, test temperature 650 °C.
Clear internal dimensions: 136x102x57 mm

HALOGEN FREE | 650° | CE UKCA | IP 20 | 500 V

PP Polypropylene

Master data

Item number	2007876
Type	T100 WS 1S3 2S3D
Description 1	Junction box
Description 2	with Wieland connector 1S3+2B3
Manufacturer	OBO
Dimension	150x116x67
Colour	Light grey; RAL 7035
Material	Polypropylene
Smallest sales unit	1
Unit of quantity	Piece
Weight	20.7 kg
Weight unit	kg/100 pc.
CO2 Footprint (GWP) Cradle-to-Gate	0,6146 kg CO2e / 1 Piece

Technical data sheet

Junction box T 100, with Wieland connector and socket 1S3+2B3

Item number: 2007876

Dimensions

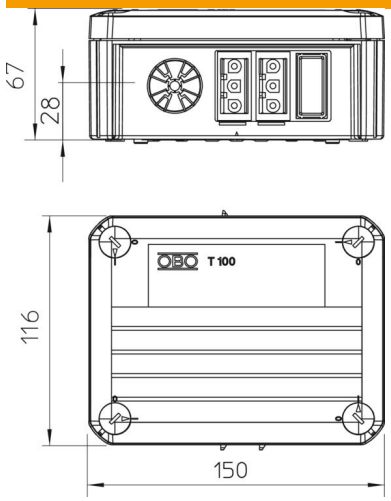

Length	150 mm
Width	116 mm
Height	67 mm

Technical data

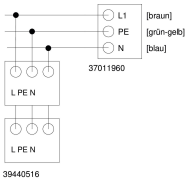

Expandable	yes
No. of entries	4
Type of entry	Strain relief entries for direct penetrations for cable diameters of 7−21 mm
Type of housing penetration	Pre-marking
Measured insulation voltage Vi	500 V
Equipment	Miscellaneous
Cover	Not transparent
Cover fastening	Screwed
Entry from rear	yes
Entries	4
Explosion-tested version	no
Flame-resistant	acc. to VDE 0471/DIN 695 Part 2-1, test temperature 650°C
Shape	Rectangular
Maintain electrical functions	Without
For Ex zone	Without
For Ex zone gas	Without
For Ex zone dust	Without
Halogen-free	yes
Clear internal dimensions	136x102x57 mm
With screening	no
with lid	yes
Mounting type	Wall/ceiling mounting
Nominal cross-section, min.	2.5 mm²
Nominal voltage	500 V
Sealable	yes
ROHS-conformant	Exempt
Protection rating	IP20
Permitted temperature range, max.	60 °C
Permitted temperature range, min.	-5 °C

Technical data sheet

Junction box T 100, with Wieland connector and socket 1S3+2B3

Item number: 2007876

Technical data

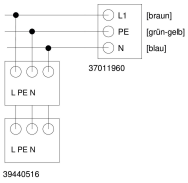

Transparent lid	no
Weatherproof	no
Junction box cover version	Blanking lid