Technical data sheet

Junction box T350, closed, transparent elevated cover

Item number: 2007778

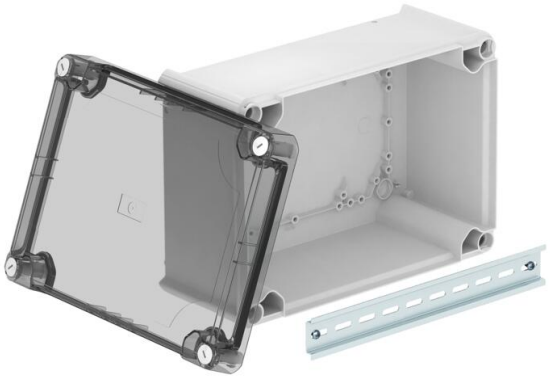

Closed junction box for the connection of cables and lines indoors and in protected outdoor areas. Rectangular design without entries. Suitable for wall and ceiling mounting, on mounting panels and threads in the floor. With the option to fasten inside and to mount via the corner domes. High, transparent cover with quick lock, sealable. Made from halogen-free and UV-stabilized materials.

With hat profile rail.

Junction box according to DIN EN 60670. Flame-resistant to DIN EN 60695/2/11, test temperature 650 °C. Impact resistance IK05 according to DIN EN 50102. Clear internal dimensions: 267x182x127 mm

PP/PC Polypropylene / polycarbonate

Master data

Item number	2007778
Type	T 350 OE HD TR
Description 1	Junction box, closed
Description 2	with high transparent cover
Manufacturer	OBO
Dimension	285x201x139
Colour	Light grey; RAL 7035
Material	Polypropylene / polycarbonate
Smallest sales unit	1
Unit of quantity	Piece
Weight	68.66 kg
Weight unit	kg/100 pc.
CO2 Footprint (GWP) Cradle-to-Gate	3,1446 kg CO2e / 1 Piece

Technical data sheet

Junction box T350, closed, transparent elevated cover

Item number: 2007778

Dimensions

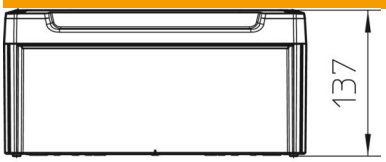

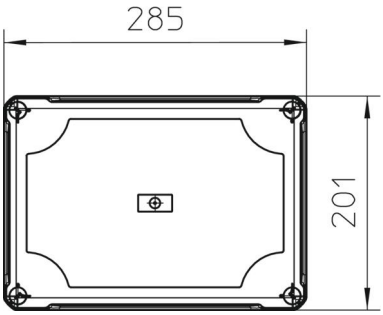

Length	285 mm
Width	201 mm
Height	137 mm

Technical data

Expandable	yes
Type of entry	None
Type of entry	Cable
Type of housing penetration	Without
Measured insulation voltage Vi	500 V
Equipment	Support rail
Cover	Transparent
Cover fastening	Screwed
Entry from rear	yes
Entries	None
Explosion-tested version	no
Flame-resistant	Acc. to VDE 0471/DIN 695 Part 2-1, test temperature 750°C
Shape	Rectangular
Maintain electrical functions	Without
For Ex zone	Without
For Ex zone gas	Without
For Ex zone dust	Without
Fibre-glass reinforced	yes
Halogen-free	yes
Clear internal dimensions	267x182x127 mm
With screening	no
with lid	yes
Mounting type	Wall/ceiling mounting
Nominal cross-section, min.	35 mm²
Nominal voltage	500 V
Sealable	yes
ROHS-conformant	yes
Protection rating	IP66
Protection rating IK code	IK05.
Permitted temperature range, max.	60 °C

Technical data

Permitted temperature range, min.	-5 °C
Transparent lid	yes
Weatherproof	no