Technical data sheet

Junction box T 250, plug-in seal

Item number: 2007657

Junction box for the connection of cables and lines indoors and in protected outdoor areas. Rectangular design with plug-in seals to the sides and knock-out entries in the bottom. Suitable for wall and ceiling mounting, on mounting panels and threads in the floor. With the option to fasten inside and to mount via the corner domes. Cover with quick lock, sealable. Made from halogen-free and UV-resistant materials. Junction box according to DIN EN 60670. Flame-resistant to DIN EN 60695/2/11, test temperature 650 °C. Impact resistance IK05 according to DIN EN 50102.

HALOGEN FREE | 650° | UV RESISTANT | IP 66 | M25 | M32 | 25 mm² | 16 | 500 V | IK 05

PP/GF Polypropylene, fibreglass reinforced

Master data

Item number	2007657
Type	T 250 RO-LGR
Description 1	Junction box
Description 2	with entries, red cover
Manufacturer	OBO
Dimension	240x190x95
Colour	Grey / red
Material	Polypropylene, fibreglass reinforced
Smallest sales unit	1
Unit of quantity	Piece
Weight	44.8 kg
Weight unit	kg/100 pc.
CO2 Footprint (GWP) Cradle-to-Gate	1,6309 kg CO2e / 1 Piece

Technical data sheet

Junction box T 250, plug-in seal

Item number: 2007657

Dimensions

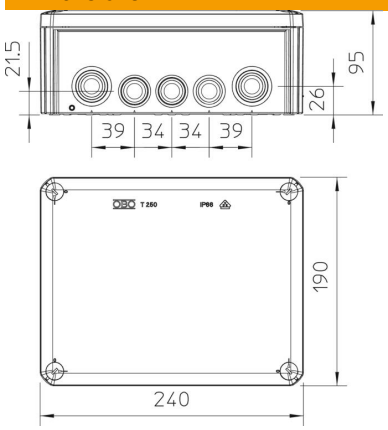

Length	240 mm
Width	190 mm
Height	95 mm

Technical data

Expandable	yes
No. of entries	16
Type of entry	Plug-in seal
Type of entry	Cable
Type of housing penetration	Cuttable stepped membrane
Measured insulation voltage Vi	500 V
Equipment	Without
Cover	Not transparent
Cover fastening	Screwed
Entry from rear	yes
Entries	9 x M25 7 x M32
Explosion-tested version	no
Flame-resistant	acc. to VDE 0471/DIN 695 Part 2-1, test temperature 650°C
Shape	Rectangular
Maintain electrical functions	Without
For Ex zone	Without
For Ex zone gas	Without
For Ex zone dust	Without
Fibre-glass reinforced	yes
Halogen-free	yes
Clear internal dimensions	225x173x86 mm
With screening	no
with lid	yes
Mounting type	Wall/ceiling mounting
Nominal cross-section, min.	25 mm²
Nominal voltage	500 V
Sealable	yes
ROHS-conformant	yes
Protection rating	IP66
Protection rating IK code	IK05.
Permitted temperature range, max.	65 °C

Technical data sheet

Junction box T 250, plug-in seal

Item number: 2007657

Technical data

Permitted temperature range, min.	-25 °C
Transparent lid	no
Weatherproof	no