Technical data sheet

Junction box T 160, with 10xM32 entries

Item number: 2007097

Junction box for the connection of cables and lines indoors and in protected outdoor areas. Rectangular design with plug-in seals to the sides and knock-out entries in the bottom. Suitable for wall and ceiling mounting and on mounting panels. With the option to fasten inside and to mount via the corner domes. Cover with quick lock, sealable. Made from halogen-free and UV-resistant materials.

Junction box according to DIN EN 60670. Flame-resistant to DIN EN 60695/2/11, test temperature 650 °C. Impact resistance IK05 according to DIN EN 50102.

HALOGEN FREE · 650° · UV RESISTANT · IP 66 · M32 · 16 mm² · 500 V · IK 05 · 10

PP/GF Polypropylene, fibreglass reinforced

Master data

Item number	2007097
Type	T 160 M32
Description 1	Junction box
Description 2	with 10xM32 entries
Manufacturer	OBO
Dimension	190x150x77
Colour	Light grey; RAL 7035
Material	Polypropylene, fibreglass reinforced
Smallest sales unit	1
Unit of quantity	Piece
Weight	30 kg
Weight unit	kg/100 pc.
CO2 Footprint (GWP) Cradle-to-Gate	1,2468 kg CO2e / 1 Piece

Technical data sheet

Junction box T 160, with 10xM32 entries

Item number: 2007097

Dimensions

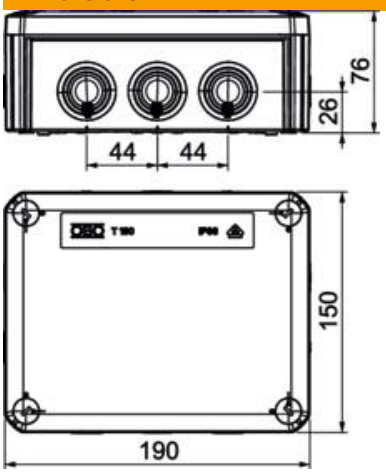

Length	190 mm
Width	150 mm
Height	77 mm

Technical data

Expandable	yes
No. of entries	10
Type of entry	Plug-in seal
Type of entry	Cable
Measured insulation voltage Vi	500 V
Equipment	Without
Cover	Not transparent
Cover fastening	Screwed
Entry from rear	yes
Entries	10 x M32
Explosion-tested version	no
Flame-resistant	acc. to VDE 0471/DIN 695 Part 2-1, test temperature 650°C
Shape	Rectangular
Maintain electrical functions	Without
For Ex zone	Without
For Ex zone gas	Without
For Ex zone dust	Without
Fibre-glass reinforced	yes
Halogen-free	yes
Clear internal dimensions	176x135x67 mm
With screening	no
with lid	yes
Mounting type	Wall/ceiling mounting
Nominal cross-section, min.	16 mm²
Nominal voltage	500 V
Sealable	yes
ROHS-conformant	yes
Protection rating	IP66
Protection rating IK code	IK05.
Permitted temperature range, max.	65 °C
Permitted temperature range, min.	-25 °C

Technical data

Transparent lid	no
Weatherproof	no